Vanut®

Tecnologie per Fresare

Milling Technologies

CATALOGO ~ *CATALOGUE* 2025

www.vanut.net

INDICE
Index

TESTINE PER FRESATURE - exchangeable heads for milling

TESTINE MICROREGISTRABILI - Micro-adjustable Boring heads

PROLUNGHE E PINZE - Extension & collets

FRESE ALTI AVANZAMENTI - High feed milling

FRESE PER COPIATURA - Copy milling cutters

FRESE PER SPALLAMENTI 90° - Shoulder milling cutters 90°

FRESE A RICCIO - Helical milling cutters

FRESE PER SPALLAMENTI K° - Shoulder milling cutters K°

FRESE TORICHE PER SPIANATURE E COPIATURE - Toric milling cutters for copyng & facing

INDICE
Index

SISTEMA DI CODIFICA FRESE STANDARD

Standard milling cutters codification system

VANUT	Gradi Fresa *Milling Grades*	Tipo Inserto *Insert type*	Diametro Fresa *Milling cutter diameter*	Tipo Attacco e Lubrificazione *Shank type & Internal coolant*	N° Taglienti *Number of teeth*	Rotazione *Rotation* (R/L)	Diametro Attacco *(quando presente) Shank Diameter (if present)*
V	90.	AP10.	025.	WXL.	Z3.	R	-24

90°
75°
60°
45°
30°
15°
00 (Frese toriche - Toric type)

W	Weldon Shank - *attacco Weldon*
WW	Weldon Water - *attacco Weldon con lubrificazione*
WWL	Weldon Water Long series - *attacco Weldon con lubrificazione, serie Lunga*
WXL	Water eXtra Long series - *serie Extra Lunga con lubrificazione*
C	Cylindrical series - *serie Cilindrica*
CL	Cylindrical Long series - *serie Cilindrica Lunga*
CLW	Cylindrical Long series Water - *serie Cilindrica Lunga con lubrificazione*
CM	Cono Morse - *Morse shank*
M	Shell shank - *attacco Manicotto*
MW	Shell shank Water - *attacco Manicotto con lubrificazione*
M10	Threaded shank M.. - *attacco Filettato M..*
M10W	Threaded shank M.. Water - *attacco Filettato con lubrificazione M..*

VANUT	K = Kienninger A = Araf	Gradi Fresa *Milling Grades*	Tipo Inserto *Insert type*	Diametro Fresa *Milling cutter diameter*	Diametro Attacco *Shank Diameter*	Tipo Attacco *Shank type*	N° Taglienti *Number of teeth*	Rotazione *Rotation* (R/L)
V	K	90.	SF	12	10.	C.	Z1.	R

90°
00° INSERTO TORICO
Toric insert

C	Cylindrical series - *serie Cilindrica*
CM	Cono Morse - *Morse shank*
M12	Threaded shank M.. - *attacco Filettato M..*

D	X	25	12	3	S
Testine per FRESATURA *Exchangeable heads for milling*	Inserto XD.. *Insert type XD..*	Diametro Fresa *Milling cutter diameter*	Attacco Filettato "M" *Threaded Shank*	N° Taglienti *Number of teeth*	Gradi Fresa *Milling Grades* S= 95° - senza/without= 90° *(quando presente/if present)*

D	35	16	3	S	/12
Testine per COPIATURA *Exchangeable heads for copying*	Diametro Fresa *Milling cutter diameter*	Attacco Filettato "M" *Threaded Shank*	N° Taglienti *Number of teeth*	Gradi Fresa=0° (Torico) *Milling Grades (Toric Insert)*	Tipo Inserto RD.. *Insert type RD.. (quando presente/if present)*

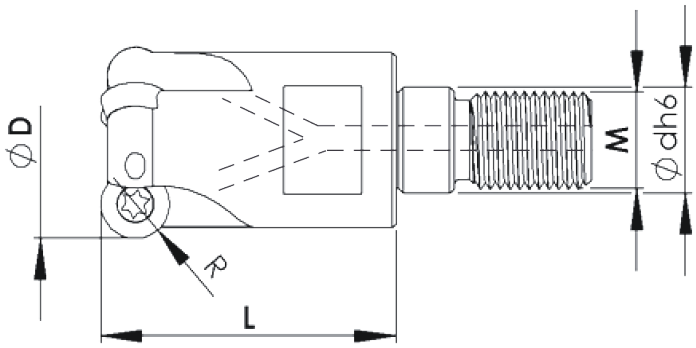

ATTACCO FILETTATO - Threaded Shank							INSERTO Insert	VITE Screw	TORX Key	
CODICE / *Code*	Ø D	L	M	Ø dh6	Z	R				Kg
D1582S	15	23	8	8,5	2	3,5	RD..0702	VM250	T07	0,021
D1682S	16	23	8	8,5	2	3,5	RD..0702	VM250	T07	0,022
D1683S	16	23	8	8,5	3	3,5	RD..0702	VM250	T07	0,022
D20103S	20	30	10	10,5	3	3,5	RD..0702	VM250	T07	0,056
D20104S	20	30	10	10,5	4	3,5	RD..0702	VM250	T07	0,054
D25125S	25	35	12	12,5	5	3,5	RD..0702	VM250	T07	0,090
D32165S	32	43	16	17	5	3,5	RD..0702	VM250	T07	0,208
D20102S	20	30	10	10,5	2	5	RD..1003	VM350	T15	0,047
D25122S/10	25	35	12	12,5	2	5	RD..1003	VM358	T15	0,085
D25123S	25	35	12	12,5	3	5	RD..1003	VM358	T15	0,088
D32163S/10	32	43	16	17	3	5	RD..1003	VM358	T15	0,200
D32164S	32	43	16	17	4	5	RD..1003	VM358	T15	0,198
D35163S/10	35	43	16	17	3	5	RD..1003	VM358	T15	0,206
D35164S	35	43	16	17	4	5	RD..1003	VM358	T15	0,215
D35165S	35	43	16	17	5	5	RD..1003	VM358	T15	0,215
D40164S/10	40	43	16	17	4	5	RD..1003	VM358	T15	0,210
D42165S	42	43	16	17	5	5	RD..1003	VM358	T15	0,248

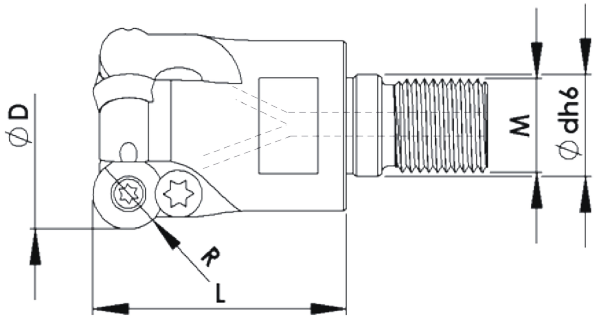

ATTACCO FILETTATO - Threaded Shank							INSERTO Insert	VITE Screw	VITE FISSAGGIO Fixing Screw	TORX Key	
CODICE / Code	Ø D	L	M	Ø dh6	Z	R					Kg
D24122S	24	35	12	12,5	2	6	RD..12T3	VM358	-	T15	0,074
D25122S	25	35	12	12,5	2	6	RD..12T3	VM358	OM3505	T15	0,077
D32163S/12	32	43	16	17	3	6	RD..12T3	VM358	OM3505	T15	0,181
D35163S/12	35	43	16	17	3	6	RD..12T3	VM358	OM3505	T15	0,203
D40164S/12	40	43	16	17	4	6	RD..12T3	VM358	OM3505	T15	0,215
D42164S	42	43	16	17	4	6	RD..12T3	VM358	OM3505	T15	0,240

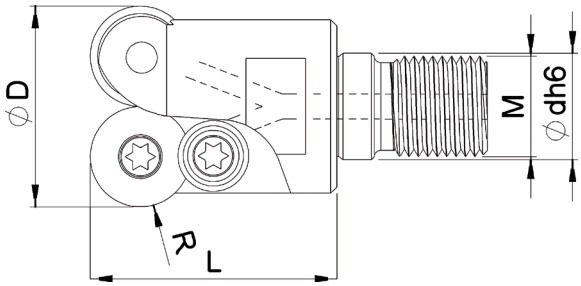

ATTACCO FILETTATO - Threaded Shank							INSERTO Insert	VITE Screw	RONDELLA Lock Washer	VITE RONDELLA Screw Lock Washer	TORX Key	
CODICE / Code	Ø D	L	M	Ø dh6	Z	R						Kg
D32162S	32	43	16	17	2	8	RD..1604	VM4511	RO1104	VM4511	T20	0,170

TESTINE PER FRESATURE 90° - 95°
Exchangeable heads for milling 90° - 95°

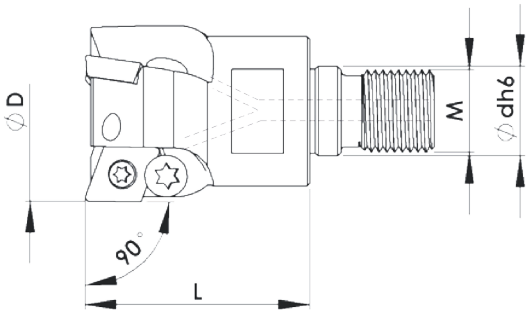

ATTACCO FILETTATO - Threaded Shank						INSERTO Insert	VITE Screw	VITE FISSAGGIO Fixing Screw	TORX Key	
CODICE / Code	Ø D	L	M	Ø dh6	Z					Kg
DX1062	10	18	6	6,5	2	XD..0401	VM180	-	T06	0,011
DX1262	12	18	6	6,5	2	XD..0401	VM180	-	T06	0,012
DX1682	16	23	8	8,5	2	XD..0602	VM250	-	T07	0,022
DX20103	20	30	10	10,5	3	XD..0602	VM250	-	T07	0,050
DX25123	25	35	12	12,5	3	XD..0602	VM250	-	T07	0,093
DX25124	25	35	12	12,5	4	XD..0602	VM250	-	T07	0,100
DX35163	35	43	16	17	3	XD..10T3	VM359	OM3505	T15	0,204
DX42164	42	43	16	17	4	XD..10T3	VM359	OM3505	T15	0,257

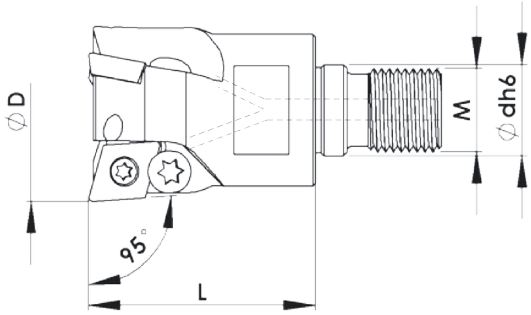

ATTACCO FILETTATO - Threaded Shank						INSERTO Insert	VITE Screw	VITE FISSAGGIO Fixing Screw	TORX Key	
CODICE / Code	Ø D	L	M	Ø dh6	Z					Kg
DX1062S	10	18	6	6,5	2	XD..0401	VM180	-	T06	0,011
DX1262S	12	18	6	6,5	2	XD..0401	VM180	-	T06	0,012
DX1563S	15	18	6	6,5	3	XD..0401	VM180	-	T06	0,017
DX1682S	16	23	8	8,5	2	XD..0602	VM250	-	T07	0,022
DX20103S	20	30	10	10,5	3	XD..0602	VM250	-	T07	0,050
DX25123S	25	35	12	12,5	3	XD..0602	VM250	-	T07	0,093
DX25124S	25	35	12	12,5	4	XD..0602	VM250	-	T07	0,100
DX35165S	35	43	16	17	5	XD..0602	VM250	-	T07	0,222
DX42166S	42	43	16	17	6	XD..0602	VM250	-	T07	0,285
DX32163S	32	43	16	17	3	XD..10T3	VM359	OM3505	T15	0,176
DX35163S	35	43	16	17	3	XD..10T3	VM359	OM3505	T15	0,191
DX40164S	40	43	16	17	4	XD..10T3	VM359	OM3505	T15	0,254
DX42164S	42	43	16	17	4	XD..10T3	VM359	OM3505	T15	0,258

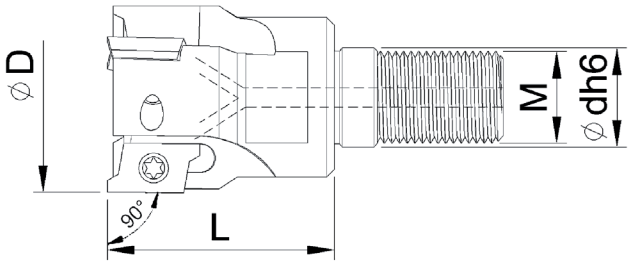

ATTACCO FILETTATO - Threaded Shank						INSERTO Insert	VITE Screw	TORX Key	
CODICE / Code	Ø D	L	M	Ø dh6	Z				Kg
V90RT1016M08WZ2R	16	25	8	8,5	2	RT 1003/T3	VM2506B	T09	0,022
V90RT1020M10WZ3R	20	30	10	10,5	3	RT 1003/T3	VM2506B	T09	0,050
V90RT1025M12WZ3R	25	35	12	12,5	3	RT 1003/T3	VM2506B	T09	0,092
V90RT1025M12WZ4R	25	35	12	12,5	4	RT 1003/T3	VM2506B	T09	0,090
V90RT1032M16WZ5R	32	43	16	17	5	RT 1003/T3	VM2506B	T09	0,206
V90RT1320M10WZ2R	20	25	10	10,5	2	RT 1304..	VM30IP	T09IP	0,045
V90RT1325M12WZ3R	25	30	12	12,5	3	RT 1304..	VM30IP	T09IP	0,070
V90RT1332M16WZ4R	32	40	16	17	4	RT 1304..	VM30IP	T09IP	0,185
V90RT1335M16WZ5R	35	40	16	17	5	RT 1304..	VM30IP	T09IP	0,190
						Non disponibili *not available*			

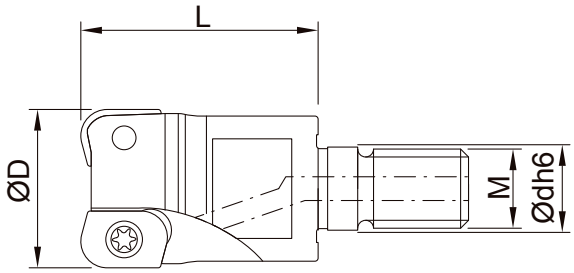

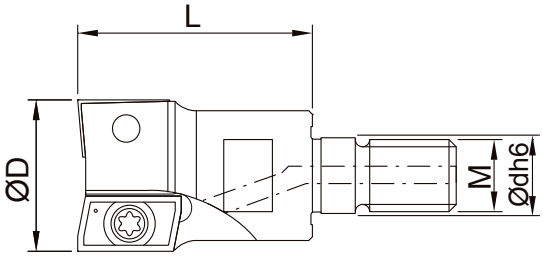

ATTACCO FILETTATO - Threaded Shank						INSERTO Insert	VITE Screw	TORX Key	
CODICE / Code	Ø D	L	M	Ø dh6	Z	INTERCAMBIABILE *interchangeable*			Kg
V90ASM07012M06Z3R-ED	12	20	06	6,5	3	 EDMT 070220R	VM1804A	T06	0,010
V90ASM07016M08WZ4R-ED	16	25	08	8,5	4		VM1804A	T06	0,020
V90ASM07020M10WZ5R-ED	20	25	10	10,5	5		VM1804A	T06	0,058
V90ASM07025M12WZ5R-ED	25	28	12	12,5	5		VM1804A	T06	0,085
V90ASM07012M06Z3R-JD	12	20	06	6,5	3	 JDMT 0702..R	VM1804A	T06	0,010
V90ASM07016M08WZ4R-JD	16	25	08	8,8	4		VM1804A	T06	0,020
V90ASM07020M10WZ5R-JD	20	25	10	10,5	5		VM1804A	T06	0,058
V90ASM07025M12WZ5R-JD	25	28	12	12,5	5		VM1804A	T06	0,085

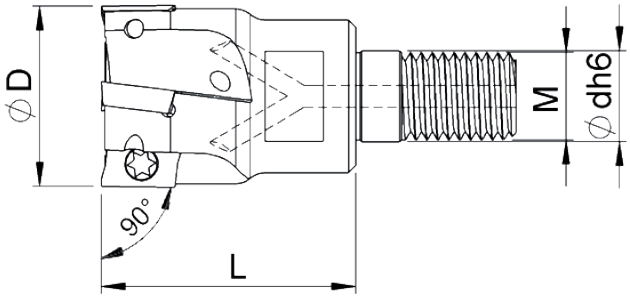

ATTACCO FILETTATO - Threaded Shank						INSERTO Insert	VITE Screw	TORX Key	
CODICE / Code	Ø D	L	M	Ø dh6	Z				Kg
V90AP1016M08WZ2R	16	25	8	8,5	2	AP..1003	VM2506	T08	0,022
V90AP1020M10WZ3R	20	30	10	10,5	3	AP..1003	VM2506	T08	0,050
V90AP1025M12WZ4R	25	35	12	12,5	4	AP..1003	VM2506	T08	0,084
V90AP1032M16WZ5R	32	43	16	17	5	AP..1003	VM2506	T08	0,213
V90AP1040M16WZ6R	40	43	16	17	6	AP..1003	VM2506	T08	0,290

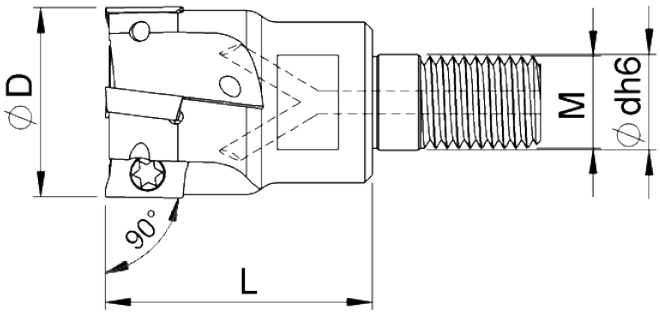

ATTACCO FILETTATO - Threaded Shank						INSERTO Insert	VITE Screw	TORX Key	
CODICE / Code	Ø D	L	M	Ø dh6	Z	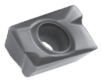			Kg
V90AP1625M12WZ2R	25	35	12	12,5	2	AP..1604	VM4008	T15	0,075
V90AP1632M16WZ3R	32	43	16	17	3	AP..1604	VM4010	T15	0,193

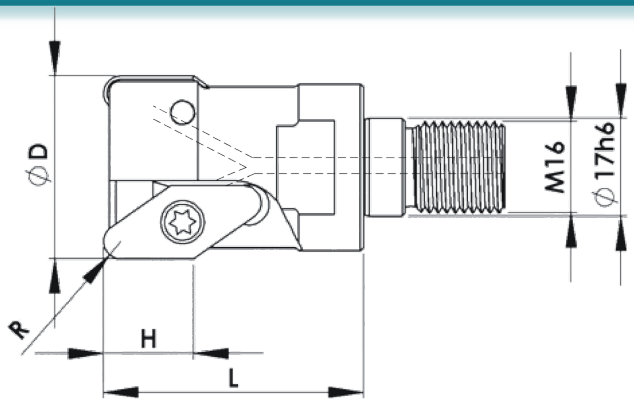

ATTACCO FILETTATO - Threaded Shank						INSERTO Insert	VITE Screw	TORX Key	
CODICE / Code	Ø D	L	H	Z	R				Kg
V90VC22032M16WZ2R	32	48	15	2	3	VC..220530	VM4511	T20	0,172
V90VC22042M16WZ3R	42	48	15	3	3	VC..220530	VM4511	T20	0,230

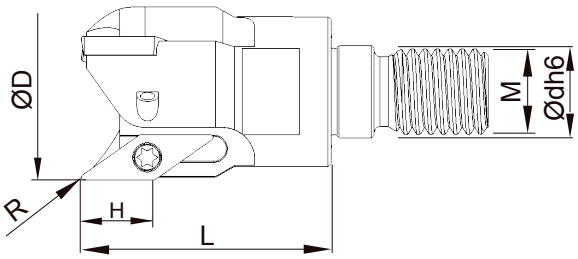

ATTACCO FILETTATO - Threaded Shank								INSERTO Insert	VITE Screw	TORX Key	
CODICE / Code	Ø D	L	M	Ø dh6	H	Z	R				Kg
V90VC11020M10WZ2R	20	30	10	10,5	9	2	1	VCGX 1103..	VM2506	T08	0,035
V90VC11025M12WZ3R	25	35	12	12,5	9	3	1	VCGX 1103..	VM2506	T08	0,050
V90VC11032M16WZ4R	32	43	16	17	9	4	1	VCGX 1103..	VM2506	T08	0,084

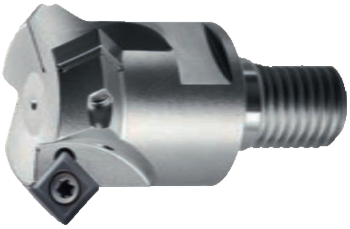

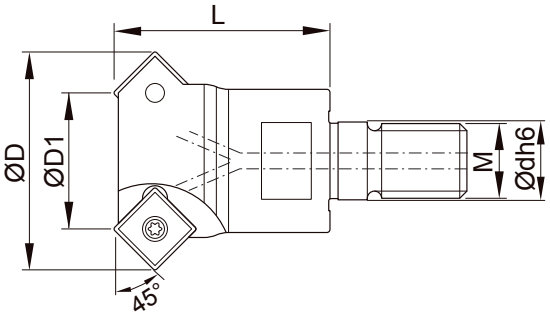

ATTACCO FILETTATO - Threaded Shank							INSERTO Insert	VITE Screw	TORX Key	
CODICE / Code	Ø D	Ø D1	L	Z	M	Ø dh6				Kg
V45SP09016M10Z2R	28,8	16	30	2	10	10,5	SPMT 09T308	VM4008	T15	0,053
V45SP09030M16WZ3R	42,3	30	35	3	16	17	SPMT 09T308	VM4008	T15	0,180

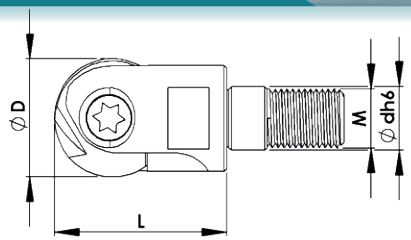

ATTACCO FILETTATO - Threaded Shank						INSERTO Insert	VITE Screw	TORX Key	
CODICE / Code	Ø D	L	M	Ø dh6	R				Kg
VK0012M06Z1R	12	20	6	6,5	6	WPR12..	KTS12	T20	0,012
VK0016M08Z1R	16	25	8	8,5	8	WPR16..	KTS16	T20	0,024
VK0020M10Z1R	20	30	10	10,5	10	WPR20..	KTS20	T20	0,056
VK0025M12Z1R	25	35	12	12,5	12,5	WPR25..	KTS25	T30	0,083
VK0032M16Z1R	32	45	16	17	16	WPR32..	KTS32	T30	0,190

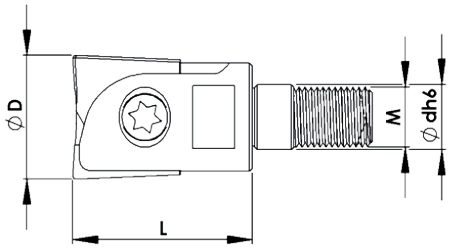

ATTACCO FILETTATO - Threaded Shank					INSERTO Insert	VITE Screw	TORX Key	
CODICE / Code	Ø D	L	M	Ø dh6				Kg
VK9012M06Z1R	12	20	6	6,5	WPV - WPB12..	KTS12	T20	0,012
VK9016M08Z1R	16	25	8	8,5	WPV - WPB16..	KTS16	T20	0,026
VK9020M10Z1R	20	30	10	10,5	WPV - WPB20..	KTS20	T20	0,053
VK9025M12Z1R	25	35	12	12,5	WPV - WPB25..	KTS25	T30	0,088
VK9032M16Z1R	32	45	16	17	WPV - WPB32..	KTS32	T30	0,205

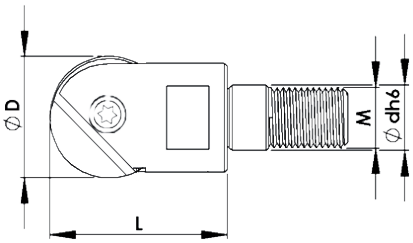

ATTACCO FILETTATO - Threaded Shank						INSERTO Insert	VITE Screw	TORX Key	
CODICE / Code	Ø D	L	M	Ø dh6	R				Kg
VA0012M06Z1R	12	20	6	6,5	6	AWR12..	TX3509A	T10	0,011
VA0016M08Z1R	16	25	8	8,5	8	AWR16..	TX4013A	T15	0,025
VA0020M10Z1R	20	30	10	10,5	10	AWR20..	TX5016A	T20	0,050
VA0025M12Z1R	25	35	12	12,5	12,5	AWR25..	TX6020A	T25	0,082
VA0032M16Z1R	32	45	16	17	16	AWR32..	TX8025A	T30	0,186

NEW!

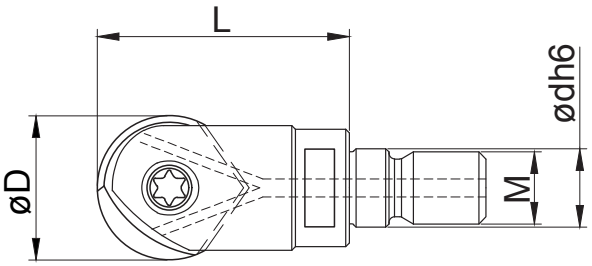

ATTACCO FILETTATO - Threaded Shank					INSERTO Insert	VITE Screw	TORX Key	
CODICE / Code	Ø D	L	M	Ø dh6				Kg
VHT0010M06WZ1R	10	25	6	6,5	ZPFG100	KTS10	T10	0,012
VHT0012M06WZ1R	12	25	6	6,5	ZPFG120	KTS12	T20	0,024
VHT0016M08WZ1R	16	30	8	8,5	ZPFG160	KTS16	T20	0,056
VHT0020M10WZ1R	20	35	10	10,5	ZPFG200	KTS20/S	T25	0,083
VHT0025M12WZ1R	25	38	12	12,5	ZPFG250	KTS25	T30	0,190

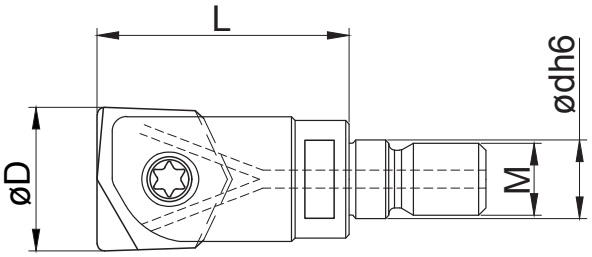

ATTACCO FILETTATO - Threaded Shank					INSERTO Insert	VITE Screw	TORX Key	
CODICE / Code	Ø D	L	M	Ø dh6				Kg
VHT9010M06WZ1R	10	25	6	6,5	ZCFW100	KTS10	T10	0,012
VHT9012M06WZ1R	12	25	6	6,5	ZCFW120	KTS12	T20	0,024
VHT9016M08WZ1R	16	30	8	8,5	ZCFW160	KTS16	T20	0,056
VHT9020M10WZ1R	20	35	10	10,5	ZCFW200	KTS20/S	T25	0,083
VHT9025M12WZ1R	25	38	12	12,5	ZCFW250	KTS25	T30	0,190

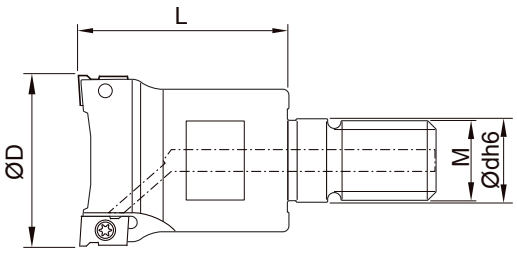

ATTACCO FILETTATO - Threaded Shank						INSERTO Insert	VITE Screw	TORX Key	
CODICE / Code	Ø D	L	M	Ø dh6	Z	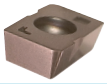			Kg
VASPV06016M08WZ2R	16	25	8	8,5	2	MPHW 0603..	VM2506E	T08	0,023
VASPV06020M10WZ3R	20	30	10	10,5	3	MPHW 0603..	VM2506E	T08	0,050
VASPV06025M12WZ4R	25	35	12	12,5	4	MPHW 0603..	VM2506E	T08	0,080
VASPV06032M16WZ5R	32	40	16	17	5	MPHW 0603..	VM2506E	T08	0,185
VASPV06035M16WZ5R	35	40	16	17	5	MPHW 0603..	VM2506E	T08	0,200
VASPV06042M16WZ6R	42	40	16	17	6	MPHW 0603..	VM2506E	T08	0,250

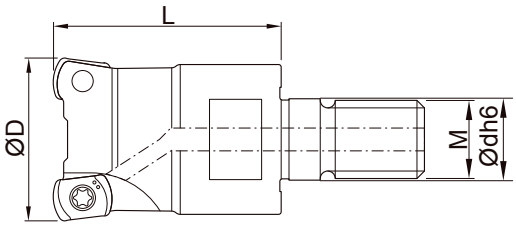

ATTACCO FILETTATO - Threaded Shank						INSERTO Insert	VITE Screw	TORX Key	
CODICE / Code	Ø D	L	M	Ø dh6	Z				Kg
VBL06016M08WZ2R	16	25	8	8,5	2	BLMP 0603..	VM2506E	T08	0,023
VBL06020M10WZ3R	20	30	10	10,5	3	BLMP 0603..	VM2506E	T08	0,048
VBL06025M12WZ4R	25	35	12	12,5	4	BLMP 0603..	VM2506E	T08	0,085
VBL06032M16WZ4R	32	40	16	17	4	BLMP 0603..	VM2506E	T08	0,190
VBL06032M16WZ5R	32	40	16	17	5	BLMP 0603..	VM2506E	T08	0,186
VBL06035M16WZ4R	35	43	16	17	4	BLMP 0603..	VM2506E	T08	0,215
VBL06035M16WZ5R	35	43	16	17	5	BLMP 0603..	VM2506E	T08	0,213
VBL06040M16WZ6R	40	43	16	17	6	BLMP 0603..	VM2506E	T08	0,241
VBL06042M16WZ6R	42	43	16	17	6	BLMP 0603..	VM2506E	T08	0,255

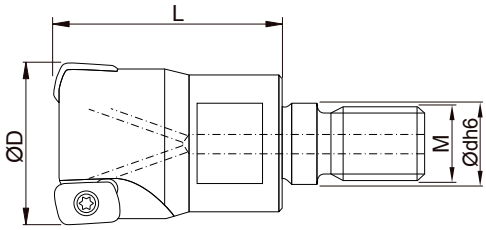

ATTACCO FILETTATO - Threaded Shank						INSERTO Insert	VITE Screw	TORX Key	
CODICE / Code	Ø D	L	M	Ø dh6	Z				Kg
VASR06016M08WZ2R	16	23	8	8,5	2	EP..0603..	VM2506B	T09	0,023
VASR06020M10WZ3R	20	30	10	10,5	3	EP..0603..	VM2506B	T09	0,050
VASR06025M12WZ4R	25	35	12	12,5	4	EP..0603..	VM2506B	T09	0,098
VASR06032M16WZ5R	32	40	16	17	5	EP..0603..	VM2506B	T09	0,210
VASR06035M16WZ5R	35	40	16	17	5	EP..0603..	VM2506B	T09	0,225
VASR06042M16WZ6R	42	43	16	17	6	EP..0603..	VM2506B	T09	0,275

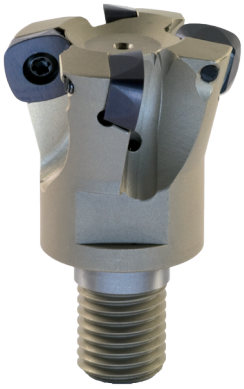

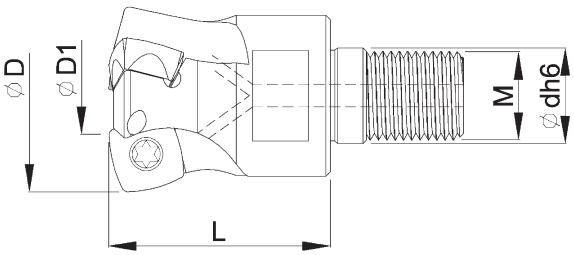

ATTACCO FILETTATO - Threaded Shank							INSERTO Insert	VITE Screw	TORX Key	
CODICE / Code	Ø D	Ø D1	L	M	Ø dh6	Z				Kg
VZDSD12035M16WZ3R	35	17	40	16	17	3	SD..1205 ZDTN-R15	VM4011	T15	0,172
VZDSD12040M16WZ3R	40	24	40	16	17	3	SD..1205 ZDTN-R15	VM4011	T15	0,203
VZDSD12040M16WZ4R	40	24	40	16	17	4	SD..1205 ZDTN-R15	VM4011	T15	0,175
VZDSD12042M16WZ4R	42	24	40	16	17	4	SD..1205 ZDTN-R15	VM4011	T15	0,178

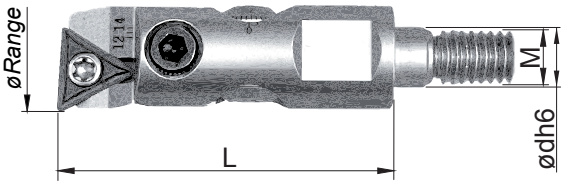

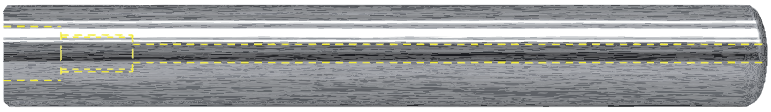

ATTACCO FILETTATO - Threaded Shank					INSERTO Insert	VITE Screw	TORX Key
CODICE / *Code*	*Ø Range*	L	M	Ø dh6			
VMR10-12M05	10 - 12	29	5	5,5	TB..0601..	VPM2x4	T06
VMR12-14M06	12 - 14	35	6	6,5	TP..0902..	VM2506	T08
VMR14-17M06	14 - 17	35	6	6,5	TP..0902..	VM2506	T08
VMR16-21M08	16 - 21	38	8	8,5	TP..0902..	VM2506	T08
VMR20-28M10	20 - 28	42	10	10,5	TP..0902..	VM2506	T08

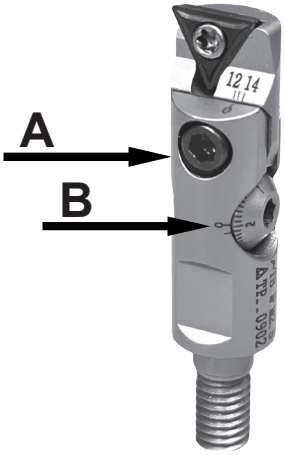

CONSIGLI DI UTILIZZO:

1) ALLENTARE LA VITE DI BLOCCAGGIO “A”
2) REGISTRARE IL DIAMETRO DI ALESATURA DESIDERATO RUOTANDO LA VITE “B”
3) SERRARE LA VITE DI BLOCCAGGIO “A”

NOTA BENE:

- LA REGOLAZIONE CENTESIMALE DI QUESTO UTENSILE PERMETTE UN RANGE DIAMETRALE DA 2 A 8 mm
- SI RACCOMANDA L’UTILIZZO ESCLUSIVAMENTE SU PORTAUTENSILI ANTIVIBRANTI

RECOMMENDATION FOR CORRECT USE:

1) LOOSEN THE CLAMPING SCREW “A”
2) TURNING THE SCREW “B” UNTIL THE DESIRED DIAMETER IS ADJUST
3) TIGHTEN THE CLAMPING SCREW “A”

DETAILS:

- THE CENTESIMAL REGULATION OF THIS TOOL ALLOWS A DIAMETER RANGE FROM 2 TO 8mm
- USE IS RECOMMENDED ONLY WITH CARBIDE TOOLHOLDER

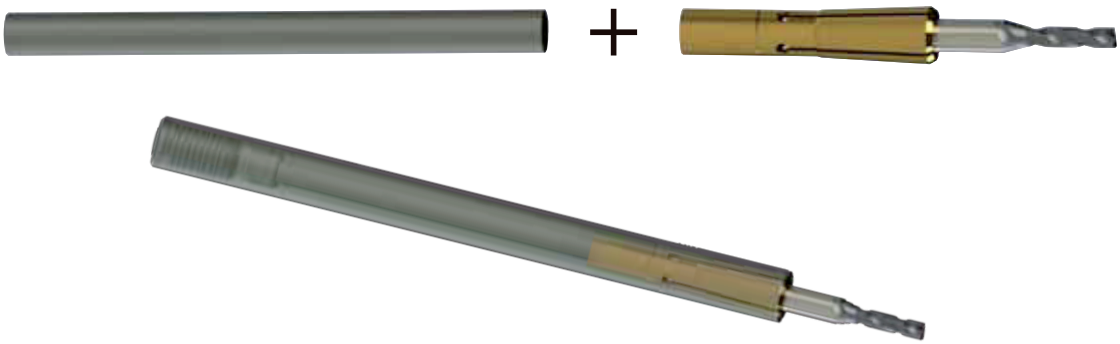

MANDRINO HDC IN MD E PINZA - Carbide HDC Chuck & Collet

TIPO DI ATTACCO Shape	CODICE code	DIMENSIONI - Dimesions d	L	D	L1	PINZA ADATTA suitable collet	Kg
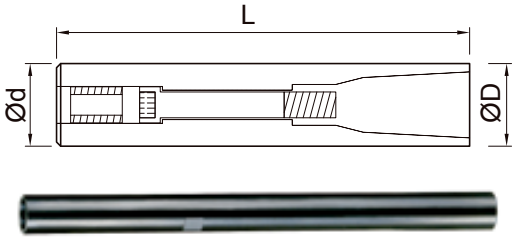	HDC4-08-100L	8	100	8	-	HDC 4	0,120
	HDC4-10-100L	10	100	10	-		0,150
	HDC4-10-150L	10	150	10	-		0,220
	HDC6-12-100L	12	100	12	-	HDC 6	0,200
	HDC6-12-150L	12	150	12	-		0,270
	HUC10-20-150L	20	150	20	-	HUC10	0,730
	HUC10-20-200L	20	200	20	-		0,950
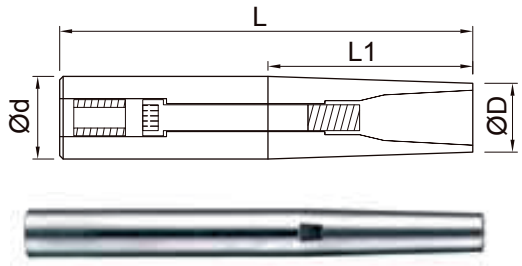	HDC4-12-150L	12	150	10	60	HDC 4	0,280
	HDC4-16-200L	16	200	10	100		0,570
	HDC6-16-150L	16	150	12,8	60	HDC 6	0,480
	HDC6-16-200L	16	200	12,8	90		0,610
	HDC6-20-250L	20	250	12,8	110		1,130
	HUC10-25-250L	25	250	23	120	HUC 10	1,770
	HUC10-25-300L	25	300	23	120		2,120
PINZA - Collet	**CODICE** - Code	d	L	D	L1		
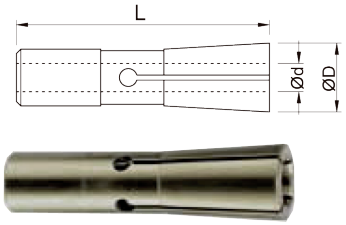	HDC 4-3	3	31	7	-		0,010
	HDC 4-4	4	31	7	-		0,010
	HDC 6-3	3	36	9,6	-		0,010
	HDC 6-4	4	36	9,6	-		0,010
	HDC 6-5	5	36	9,6	-		0,010
	HDC 6-6	6	36	9,6	-		0,010
	HUC 10-03	3	56,5	15	-		0,050
	HUC 10-04	4	56,5	15	-		0,050
	HUC 10-06	6	56,5	15	-		0,050
	HUC 10-08	8	56,5	15	-		0,050
	HUC 10-10	10	56,5	15	-		0,040

ATTACCO CILINDRICO IN METALLO DURO INTEGRALI - Carbide Cylindrical Shank

CODICE / Code	Ø Dh6	M	L	Ø D1H7	Kg
PRMD09M05-100	09	5	100	5.5	0,090
PRMD09M05-150	09	5	150	5.5	0,115
PRMD10M06-100	10	6	100	6.5	0,095
PRMD10M06-150	10	6	150	6.5	0,138
PRMD11M06-100	11	6	100	6.5	0,123
PRMD11M06-150	11	6	150	6.5	0,177
PRMD12M06-100	12	6	100	6.5	0,145
PRMD12M06-150	12	6	150	6.5	0,220
PRMD15M08-100	15	8	100	8.5	0,215
PRMD15M08-150	15	8	150	8.5	0,325
PRMD15M08-200	15	8	200	8.5	0,440
PRMD16M08-100	16	8	100	8.5	0,250
PRMD16M08-150	16	8	150	8.5	0,378
PRMD16M08-200	16	8	200	8.5	0,515
PRMD16M08-250	16	8	250	8.5	0,643
PRMD19M10-100	19	10	100	10.5	0,350
PRMD19M10-150	19	10	150	10.5	0,523
PRMD19M10-200	19	10	200	10.5	0,720
PRMD19M10-250	19	10	250	10.5	0,900
PRMD20M10-100	20	10	100	10.5	0,400
PRMD20M10-150	20	10	150	10.5	0,613
PRMD20M10-200	20	10	200	10.5	0,810
PRMD20M10-250	20	10	250	10.5	1,010
PRMD24M12-150	24	12	150	12.5	0,835
PRMD24M12-200	24	12	200	12.5	1,133
PRMD24M12-250	24	12	250	12.5	1,380
PRMD24M12-300	24	12	300	12.5	1,590
PRMD25M12-150	25	12	150	12.5	0,935
PRMD25M12-200	25	12	200	12.5	1,230
PRMD25M12-250	25	12	250	12.5	1,560
PRMD25M12-300	25	12	300	12.5	1,842
PRMD32M16-150	32	16	150	17	1,752
PRMD32M16-200	32	16	200	17	1,990
PRMD32M16-250	32	16	250	17	2,535
PRMD32M16-300	32	16	300	17	2,993
PRMD32M16-350	32	16	350	17	3,400
PRMD32M16-400	32	16	400	17	3,900

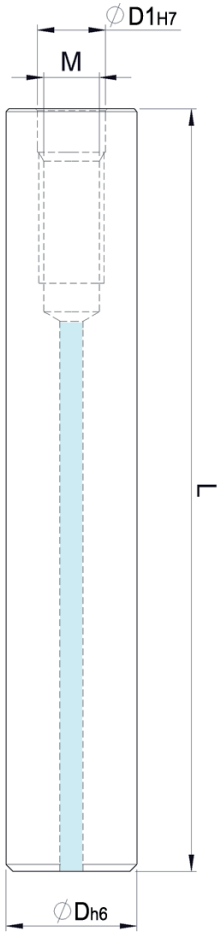

PROLUNGHE IN ACCIAIO PER ATTACCHI FILETTATI
Steel extensions for milling heads

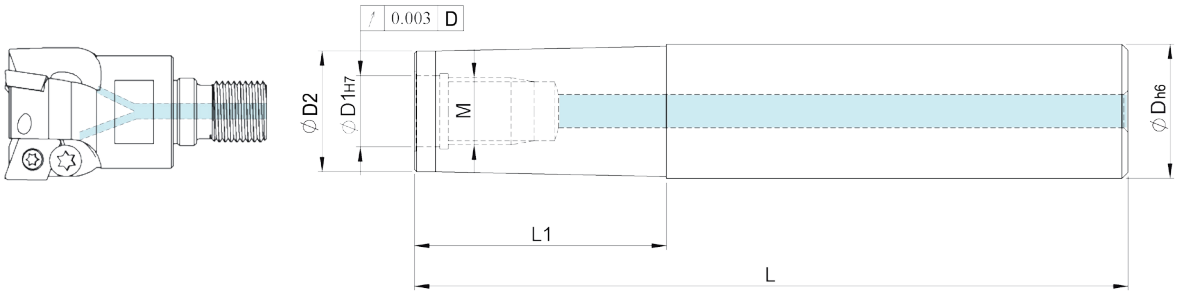

ATTACCO CILINDRICO - Cylindrical Shank							
CODICE / Code	Ø Dh6	M	L	L1	Ø D1H7	Ø D2	Kg
PR12M06160-40	12	6	160	40	6,5	9,8	0,108
PR16M08160-45	16	8	160	45	8,5	12,8	0,192
PR16M08200-10	16	8	200	10	8,5	14	0,282
PR20M10160-50	20	10	160	50	10,5	17,8	0,304
PR20M10250-12	20	10	250	12	10,5	18	0,547
PR25M12160-55	25	12	160	55	12,5	20,8	0,550
PR25M12200-15	25	12	200	15	12,5	23	0,760
PR25M12250-15	25	12	250	15	12,5	23	0,860
PR32M16160-60	32	16	160	60	17	28,8	0,783
PR32M16200-18	32	16	200	18	17	29	1,1
PR32M16250-18	32	16	250	18	17	29	1,4
PR32M16300-18	32	16	300	18	17	29	1,7
PR32M16350-18	32	16	350	18	17	29	1,950

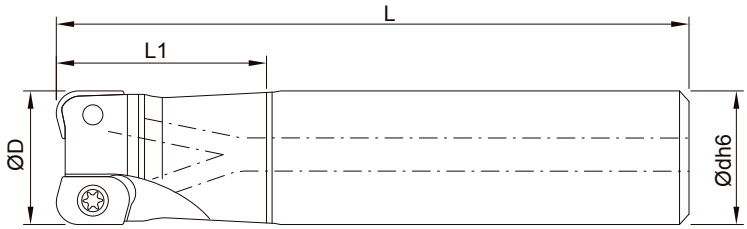

ATTACCO CILINDRICO - Cylindrical Shank						INSERTO Insert	VITE Screw	TORX Key	
CODICE / Code	Ø D	L	L1	Ø dh6	Z	INTERCAMBIABILE *interchangeable*			Kg
V90ASM07012CZ3R- ED	12	120	20	12	3	 EDMT 070220R	VM1804A	T06	0,085
V90ASM07016CWZ4R-ED	16	150	25	16	4		VM1804A	T06	0,205
V90ASM07020CWZ5R-ED	20	150	30	20	5		VM1804A	T06	0,330
V90ASM07025CWZ5R-ED	25	150	35	25	5		VM1804A	T06	0,545
V90ASM07012CZ3R- JD	12	120	20	12	3	 JDMT 0702..R	VM1804A	T06	0,085
V90ASM07016CWZ4R-JD	16	150	25	16	4		VM1804A	T06	0,205
V90ASM07020CWZ5R-JD	20	150	30	20	5		VM1804A	T06	0,330
V90ASM07025CWZ5R-JD	25	150	35	25	5		VM1804A	T06	0,545

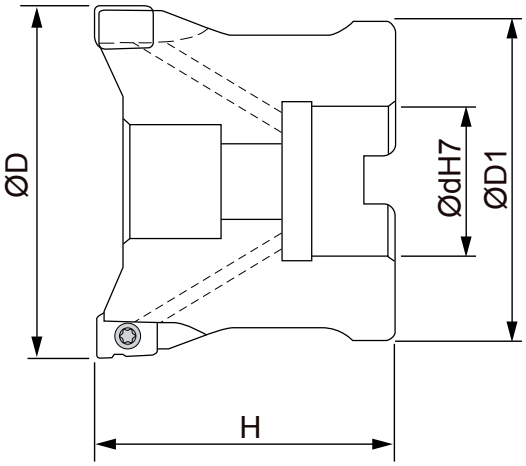

ATTACCO A MANICOTTO - Shell Shank						INSERTO Insert	VITE Screw	TORX Key	
CODICE / Code	Ø D	H	Ø D1	Ø dH7	Z				Kg
VASPV06042MWZ6R-16	42	40	35	16	6	MPHW 0603..	VM2506E	T08	0,215
VASPV06052MWZ7R-22	52	50	40	22	7	MPHW 0603..	VM2506E	T08	0,410
VASPV06052MWZ7R-27	52	50	45	27	7	MPHW 0603..	VM2506E	T08	0,384
VASPV06066MWZ8R-27	66	50	60	27	8	MPHW 0603..	VM2506E	T08	0,738

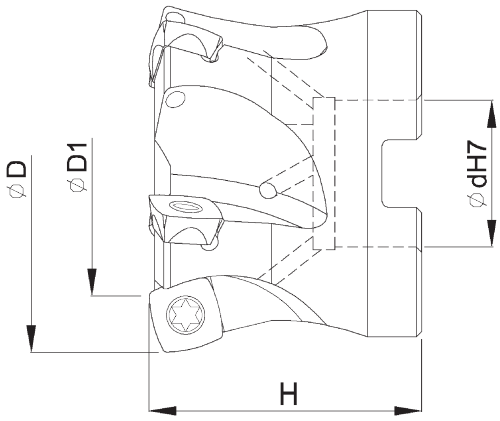

ATTACCO A MANICOTTO - Shell Shank						INSERTO Insert	VITE Screw	TORX Key	
CODICE / Code	Ø D	Ø D1	H	Ø dH7	Z				Kg
VZDSD12042MWZ4R	42	24	45	16	4	SD..1205 ZDTN-R15	VM4011	T15	0,189
VZDSD12052MWZ5R	52	34	50	22	5	SD..1205 ZDTN-R15	VM4011	T15	0,385
VZDSD12066MWZ5R	66	48	50	27	5	SD..1205 ZDTN-R15	VM4011	T15	0,925
VZDSD12080MWZ6R	80	62	70	27	6	SD..1205 ZDTN-R15	VM4011	T15	0,900
VZDSD12100MWZ8R	100	82	70	32	8	SD..1205 ZDTN-R15	VM4011	T15	1,995

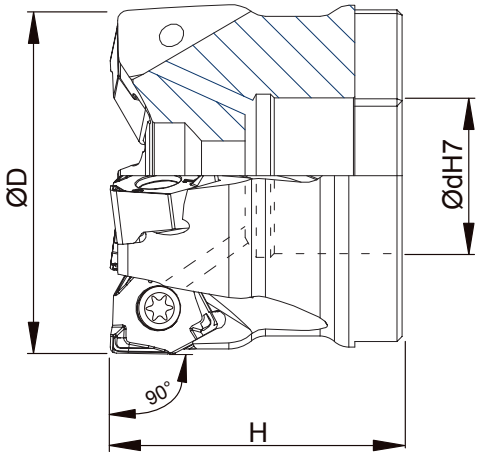

ATTACCO A MANICOTTO - Shell Shank					INSERTO Insert	VITE Screw	TORX Key	
CODICE / Code	Ø D	H	Ø dH7	Z				Kg
V90XN08050MWZ4R	50	40	22	4	XNEX 080608	VM4012	T15	0,304
V90XN08050MWZ5R	50	40	22	5	XNEX 080608	VM4012	T15	0,300
V90XN08063MWZ5R	63	40	22	5	XNEX 080608	VM4012	T15	0,440
V90XN08063MWZ6R-22	63	40	22	6	XNEX 080608	VM4012	T15	0,418
V90XN08063MWZ6R-27	63	40	27	6	XNEX 080608	VM4012	T15	0,519
V90XN08080MWZ6R	80	50	27	6	XNEX 080608	VM4012	T15	0,994
V90XN08080MWZ7R	80	50	27	7	XNEX 080608	VM4012	T15	0,960
V90XN08100MWZ8R	100	50	32	8	XNEX 080608	VM4012	T15	1,415

NEW!

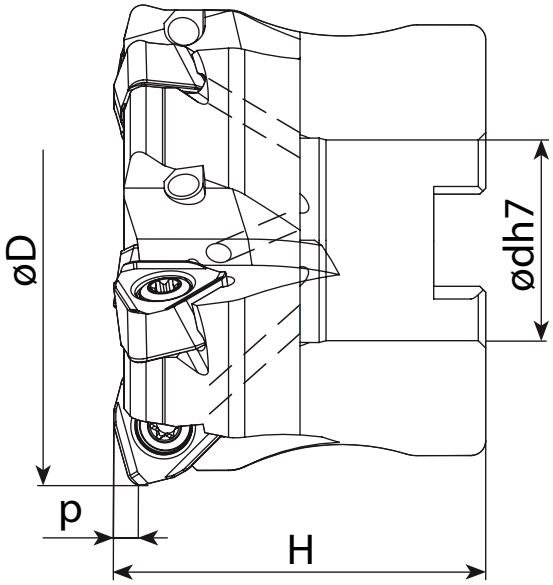

ATTACCO A MANICOTTO - Shell Shank						INSERTO Insert	VITE Screw	TORX Key	
CODICE / Code	Ø D	P	H	Ø dH7	Z				Kg
VNX09063MWZ5R	63	2	50	22	5	WNMU 090720..-PM	VM5014	T20	0,418
VNX09066MWZ5R	66	2	50	27	5	WNMU 090720..-PM	VM5014	T20	0,519
VNX09080MWZ6R	80	2	50	27	6	WNMU 090720..-PM	VM5014	T20	0,990

INSERT

CODICE / Code	*Ci*	B	R	S
WNMU 090720ZER-PM VHP125	14	1,94	2	7,66
WNMU 090720ZER-PM VHP705	14	1,94	2	7,66

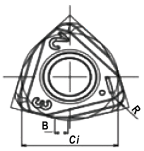

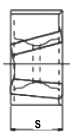

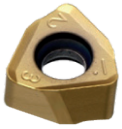

UTILIZZABILE DA ENTRAMBI I LATI
Both sides working

NEW!

SEDE INCLINATA A CODA DI RONDINE

LO SPESSORE DI 7,5 RENDE L'INSERTO 1,5 VOLTE PIU' RESISTENTE DI UN UTENSILE CONVENZIONALE
The thickness makes this insert 1,5 times more resistant than a normal cutting tool

LA SEDE INCLINATA A CODA DI RONDINE IMPEDISCE I MOVIMENTI DELL'INSERTO
The inclined seat prevents movements of the insert

CONFRONTO CONDIZIONI DI TAGLIO
Comparison of cutting conditions

Mat'l: S50C (C50)
Diametro: φ 63mm
Vc=150m/min, fz=1.5mm/t
ap=1.5, ae=40mm

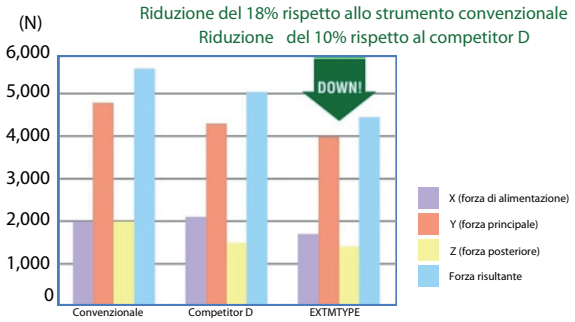

OPZIONI DI TAGLIO CONSIGLIATE
Cutting speeds recommended

Materiale da lavorare	Diametro utensile (mm)									
	63/66					80				
	Numero taglienti 5N					Numero taglienti 6N				
	ꞓ (mm)	a_p (mm)	n (min)	Vf (mm/min)	P_c (kW)	ꞓ (mm)	a_p (mm)	n (min)	Vf (mm/min)	P_c (kW)
Acciaio per stampi (1.2311, P20) 30-36HRC	~150	2	650	6,500	15,2	~150	2	520	6,240	18,5
	200	1.8	580	5,800	12,2	200	1.8	470	5,640	15,1
	250	1.5	520	5,200	9,1	250	1.8	420	5,040	13,5
	300	1	460	4,600	5,4	300	1.5	360	4,320	9,6
	350	0.6	460	3,450	2,4	350	1	360	4,320	6,4
	400	0.4	460	2,300	1,1	400	0.6	360	3,240	2,9
Acciaio per stampi (1.2311, P21) 38-43HRC	~150	1.5	550	2,750	8,4	~150	1.5	430	2,580	10,1
	200	1.2	500	2,500	6,1	200	1.2	390	2,340	7,3
	250	1	440	2,200	4,5	250	1.2	340	2,040	6,4
	300	0.7	380	1,900	2,7	300	1	300	1,800	4,7
	350	0.5	380	1,900	1,9	350	0.7	300	1,800	3,3
	400	-	-	-	-	400	0.4	300	1,800	1,9
Acciaio temprato (1.2344, 1.2379) 42-52HRC	~150	1.5	400	2,000	8,2	~150	1.5	320	1,920	10,0
	200	1.2	360	1,800	5,9	200	1.2	290	1,740	7,2
	250	1	320	1,600	4,4	250	1.2	260	1,560	6,5
	300	0.7	280	1,400	2,7	300	1	220	1,320	4,6
	350	0.5	280	1,400	1,9	350	0.7	220	1,320	3,2
	400	-	-	-	-	400	0.4	220	1,320	1,8

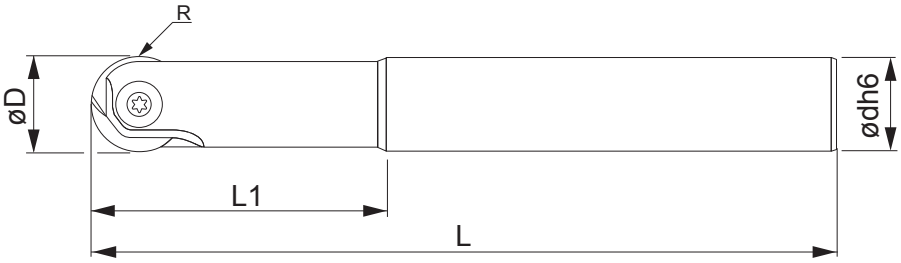

ATTACCO CILINDRICO - Cylindrical Shank						INSERTO Insert	VITE Screw	TORX Key	
CODICE / Code	Ø D	L1	L	Ø dh6	R				Kg
VK00SF0808CZ1R	8	30	120	8	4	WPR 08..	KTS08	T08	0,050
VK00SF0810CZ1R	8	30	120	10	4	WPR 08..	KTS08	T08	0,065
VK00SF1010CZ1R	10	40	150	10	5	WPR 10..	KTS10	T15	0.095
VK00SF1012CZ1R	10	35	150	12	5	WPR 10..	KTS10	T15	0,115
VK00SF1212CZ1R	12	50	160	12	6	WPR 12..	KTS12	T20	0,140
VK00SF1616CZ1R	16	53	175	16	8	WPR 16..	KTS16	T20	0,255
VK00SF2020CZ1R	20	60	190	20	10	WPR 20..	KTS20	T20	0,430
VK00SF2525CZ1R	25	70	190	25	12,5	WPR 25..	KTS25	T30	0,680
VK00SF3232CZ1R	32	80	210	32	16	WPR 32..	KTS32	T30	1,200

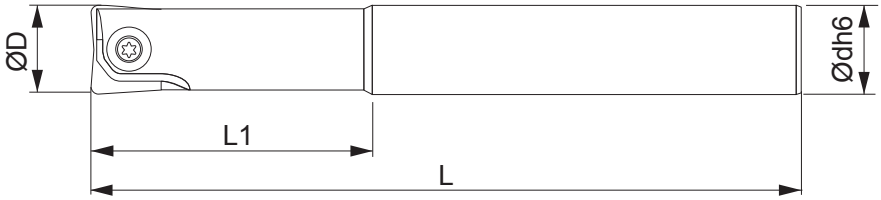

ATTACCO CILINDRICO - Cylindrical Shank					INSERTO Insert	VITE Screw	TORX Key	
CODICE / Code	Ø D	L1	L	Ø dh6				Kg
VK90SF1010CZ1R	10	40	120	10	WPV - WPB 10..	KTS10	T15	0.095
VK90SF1012CZ1R	10	35	150	12	WPV - WPB 10..	KTS10	T15	0,115
VK90SF1212CZ1R	12	50	160	12	WPV - WPB 12..	KTS12	T20	0,140
VK90SF1616CZ1R	16	53	175	16	WPV - WPB 16..	KTS16	T20	0,255
VK90SF2020CZ1R	20	60	190	20	WPV - WPB 20..	KTS20	T20	0,430
VK90SF2525CZ1R	25	70	190	25	WPV - WPB 25..	KTS25	T30	0,680
VK90SF3232CZ1R	32	80	210	32	WPV - WPB 32..	KTS32	T30	1,200

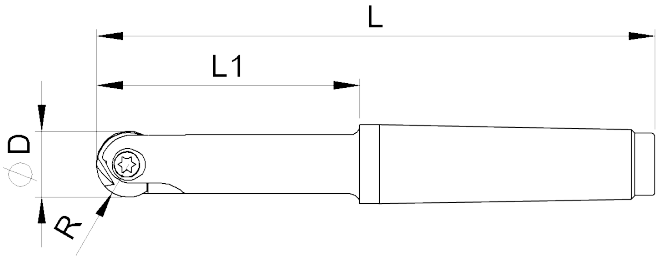

ATTACCO CONICO - Conical Shank						INSERTO Insert	VITE Screw	TORX Key	
CODICE / Code	Ø D	L1	L	R	CONO MORSE Morse Cone				Kg
VK00M016R55CM2	16	55	125	8	CM2	WPR 16..	KTS16	T20	0,153
VK00M020R70CM2	20	70	140	10	CM2	WPR 20..	KTS20	T20	0,220
VK00M025R70CM3	25	70	170	12,5	CM3	WPR 25..	KTS25	T30	0,450
VK00M032R80CM4	32	80	190	16	CM4	WPR 32..	KTS32	T30	0,850
VK00M032R95CM4	32	95	205	16	CM4	WPR 32..	KTS32	T30	0,940

Prodotti ordinabili solo su richiesta / *Products ordered only on request*

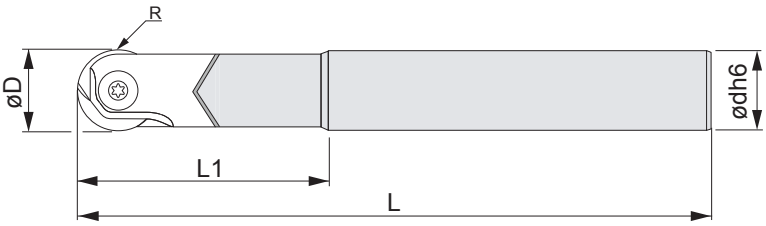

ATTACCO CILINDRICO IN METALLO DURO - Carbide Cylindrical Shank						INSERTO Insert	VITE Screw	TORX Key	
CODICE / Code	Ø D	L1	L	Ø dh6	R				Kg
VKR0808CZ1R	8	25	100	8	4	WPR 08..	KTS08	T08	0, 070
VKR1010CZ1R	10	30	120	10	5	WPR 10..	KTS10	T15	0, 120
VKR1212CZ1R	12	35	160	12	6	WPR 12..	KTS12	T20	0, 235
VKR1616CZ1R	16	50	175	16	8	WPR 16..	KTS16	T20	0, 460
VKR2020CZ1R	20	60	190	20	10	WPR 20..	KTS20	T20	0, 770

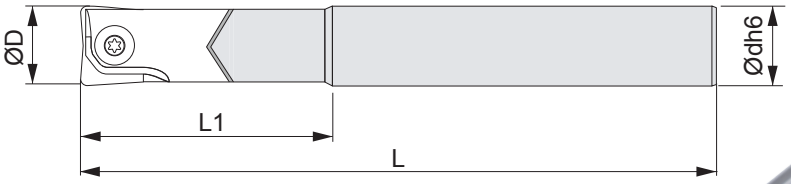

ATTACCO CILINDRICO IN METALLO DURO - Carbide Cylindrical Shank					INSERTO Insert	VITE Screw	TORX Key	
CODICE / Code	Ø D	L1	L	Ø dh6				Kg
VKT1010CZ1R	10	30	120	10	WPV - WPB 10..	KTS10	T15	0, 120
VKT1212CZ1R	12	35	160	12	WPV - WPB 12..	KTS12	T20	0, 235
VKT1616CZ1R	16	50	175	16	WPV - WPB 16..	KTS16	T20	0, 460
VKT2020CZ1R	20	60	190	20	WPV - WPB 20..	KTS20	T20	0, 770

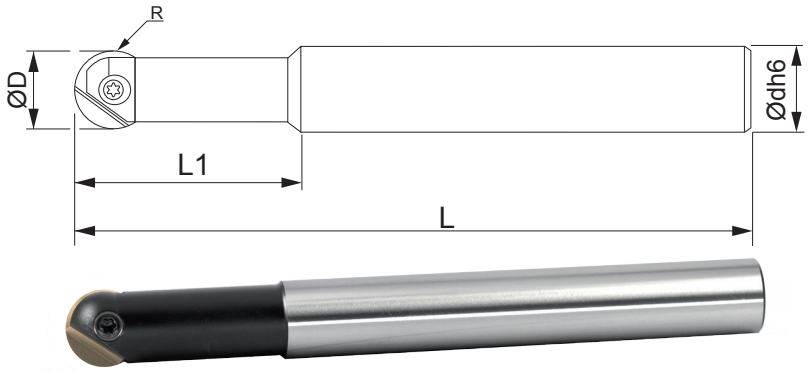

ATTACCO CILINDRICO - Cylindrical Shank						INSERTO Insert	VITE Screw	TORX Key	
CODICE / Code	Ø D	L1	L	Ø dh6	R	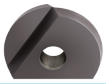			Kg
VA00SF1212CZ1R	12	35	140	12	6	AWR 12..	TX3509A	T10	0,120
VA00SF1616CZ1R	16	45	170	16	8	AWR 16..	TX4013A	T15	0,245
VA00SF2020CZ1R	20	55	180	20	10	AWR 20..	TX5016A	T20	0,400
VA00SF2525CZ1R	25	60	200	25	12,5	AWR 25..	TX6020A	T25	0,690
VA00SF3232CZ1R	32	60	200	32	16	AWR 32..	TX8025A	T30	1,190

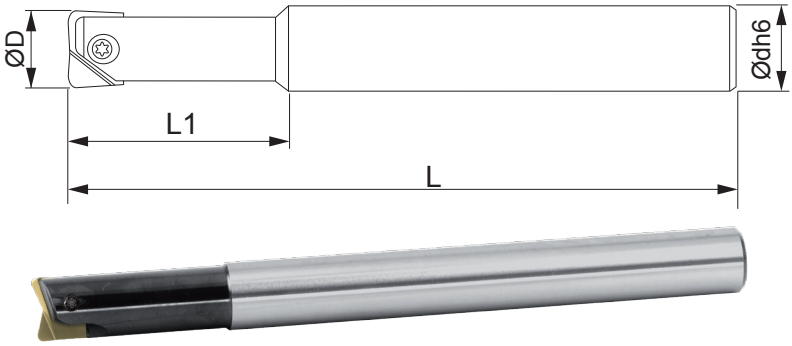

ATTACCO CILINDRICO - Cylindrical Shank					INSERTO Insert	VITE Screw	TORX Key	
CODICE / Code	Ø D	L1	L	Ø dh6				Kg
VA90SF1212CZ1R	12	35	140	12	PPHT 12..	TX3509A	T10	0,120
VA90SF1616CZ1R	16	45	170	16	PPHT 16..	TX4013A	T15	0,245
VA90SF2020CZ1R	20	55	180	20	PPHT 20..	TX5016A	T20	0,400
VA90SF2525CZ1R	25	60	200	25	PPHT 25..	TX6020A	T25	0,690

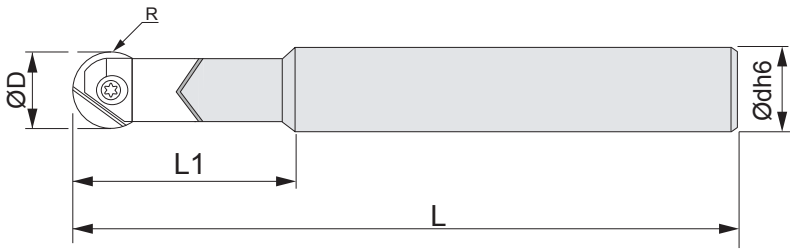

ATTACCO CILINDRICO IN METALLO DURO - Carbide Cylindrical Shank						INSERTO Insert	VITE Screw	TORX Key	
CODICE / Code	Ø D	L1	L	Ø dh6	R	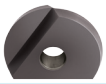			Kg
VAR1212CZ1R	12	35	160	12	6	AWR 12..	TX3509A	T10	0,235
VAR1616CZ1R	16	50	175	16	8	AWR 16..	TX4013A	T15	0,455
VAR2020CZ1R	20	60	190	20	10	AWR 20..	TX5016A	T20	0,750

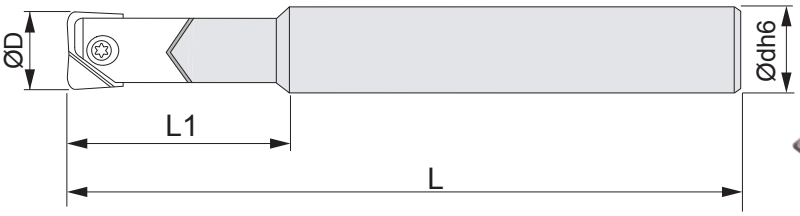

ATTACCO CILINDRICO IN METALLO DURO - Carbide Cylindrical Shank					INSERTO Insert	VITE Screw	TORX Key	
CODICE / Code	Ø D	L1	L	Ø dh6				Kg
VAT1212CZ1R	12	35	160	12	PPHT 12..	TX3509A	T10	0,235
VAT1616CZ1R	16	50	175	16	PPHT 16..	TX4013A	T15	0,455
VAT2020CZ1R	20	60	190	20	PPHT 20..	TX5016A	T20	0,750

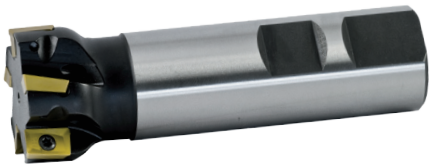

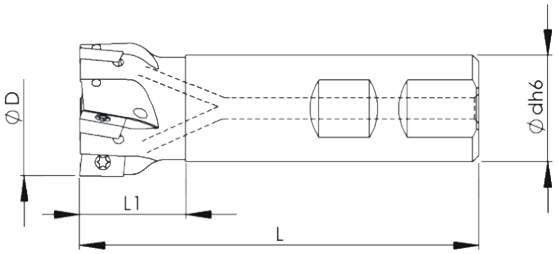

SERIE NORMALE ATTACCO WELDON - Standard Series Weldon Shank						INSERTO Insert	VITE Screw	TORX Key	
CODICE / Code	Ø D	L1	L	Ø dh6	Z	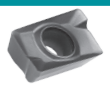			Kg
V90AP10010WWZ1R	10	24	80	16	1	AP..1003	VM2506	T08	0,093
V90AP10012WWZ1R	12	24	80	16	1	AP..1003	VM2506	T08	0,095
V90AP10014WWZ1R	14	24	80	16	1	AP..1003	VM2506	T08	0,099
V90AP10016WWZ2R	16	25	85	16	2	AP..1003	VM2506	T08	0,109
V90AP10017WWZ2R	17	25	85	16	2	AP..1003	VM2506	T08	0,118
V90AP10018WWZ2R	18	25	85	20	2	AP..1003	VM2506	T08	0,170
V90AP10020WWZ3R	20	25	90	20	3	AP..1003	VM2506	T08	0,181
V90AP10022WWZ3R	22	25	90	20	3	AP..1003	VM2506	T08	0,310
V90AP10024WWZ3R	24	25	95	25	3	AP..1003	VM2506	T08	0,307
V90AP10025WWZ3R	25	25	95	25	3	AP..1003	VM2506	T08	0,310
V90AP10025WWZ4R	25	25	95	25	4	AP..1003	VM2506	T08	0,307
V90AP10032WWZ5R	32	26	95	25	5	AP..1003	VM2506	T08	0,332

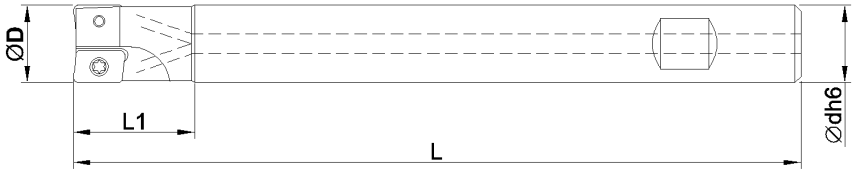

SERIE LUNGA ATTACCO WELDON - Long Series Weldon Shank						INSERTO Insert	VITE Screw	TORX Key	
CODICE / Code	Ø D	L1	L	Ø dh6	Z	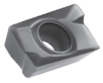			Kg
V90AP10010WWLZ1R	10	24	150	16	1	AP..1003	VM2506	T08	0,194
V90AP10012WWLZ1R	12	24	150	16	1	AP..1003	VM2506	T08	0,200
V90AP10016WWLZ2R-16	16	24	150	16	2	AP..1003	VM2506	T08	0,181
V90AP10016CWLZ2R-15	16	24	150	15	2	AP..1003	VM2506	T08	0,198
V90AP10020WWLZ3R-20	20	25	150	20	3	AP..1003	VM2506	T08	0,293
V90AP10020CWLZ3R-19	20	25	150	19	3	AP..1003	VM2506	T08	0,319
V90AP10025WWLZ3R	25	25	150	20	3	AP..1003	VM2506	T08	0,340
V90AP10025WWLZ4R	25	25	150	20	4	AP..1003	VM2506	T08	0,343
V90AP10032WWLZ5R	32	26	150	25	5	AP..1003	VM2506	T08	0,537

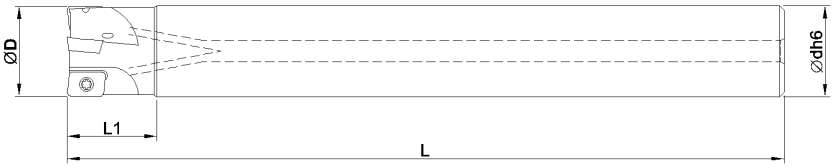

SERIE EXTRA LUNGA ATTACCO CILINDRICO - Extra long Series Cylindrical Shank						INSERTO Insert	VITE Screw	TORX Key	
CODICE / Code	Ø D	L1	L	Ø dh6	Z	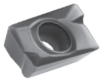			Kg
V90AP10016WXLZ2R-15	16	24	200	15	2	AP..1003	VM2506	T08	0,245
V90AP10016WXLZ2R-16	16	24	200	16	2	AP..1003	VM2506	T08	0,280
V90AP10020WXLZ3R-19	20	25	200	19	3	AP..1003	VM2506	T08	0,394
V90AP10020WXLZ3R-20	20	25	200	20	3	AP..1003	VM2506	T08	0,440
V90AP10025WXLZ3R-24	25	25	200	24	3	AP..1003	VM2506	T08	0,653
V90AP10025WXLZ3R-25	25	25	200	25	3	AP..1003	VM2506	T08	0,707
V90AP10025WXLZ4R-24	25	25	200	24	4	AP..1003	VM2506	T08	0,644
V90AP10025WXLZ4R-25	25	25	200	25	4	AP..1003	VM2506	T08	0,701

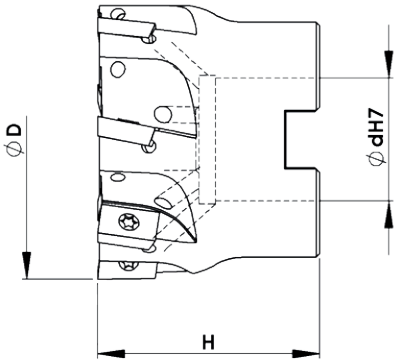

ATTACCO A MANICOTTO - Shell Shank					INSERTO Insert	VITE Screw	TORX Key	
CODICE / Code	Ø D	H	Ø dH7	Z	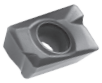			Kg
V90AP10040MWZ6R-16	40	40	16	6	AP..1003	VM2506	T08	0,225
V90AP10040MWZ6R-22	40	40	22	6	AP..1003	VM2506	T08	0,205
V90AP10050MWZ5R	50	40	22	5	AP..1003	VM2506	T08	0,349
V90AP10050MWZ7R	50	40	22	7	AP..1003	VM2506	T08	0,339
V90AP10063MWZ6R	63	40	22	6	AP..1003	VM2506	T08	0,557
V90AP10063MWZ8R	63	40	22	8	AP..1003	VM2506	T08	0,592
V90AP10080MWZ11R	80	50	27	11	AP..1003	VM2506	T08	1,306

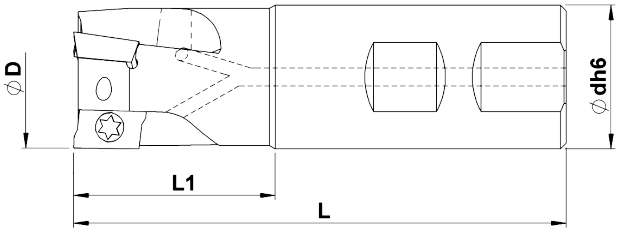

SERIE NORMALE ATTACCO WELDON - Standard Series Weldon Shank						INSERTO Insert	VITE Screw	TORX Key	
CODICE / Code	Ø D	L1	L	Ø dh6	Z	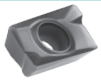			Kg
V90AP16025WWZ2R	25	44	100	25	2	AP..1604	VM4008	T15	0,304
V90AP16028WWZ3R	28	44	100	25	3	AP..1604	VM4010	T15	0,355
V90AP16032WWZ3R	32	50	110	32	3	AP..1604	VM4010	T15	0,553
V90AP16040WWZ4R	40	45	115	32	4	AP..1604	VM4010	T15	0,694

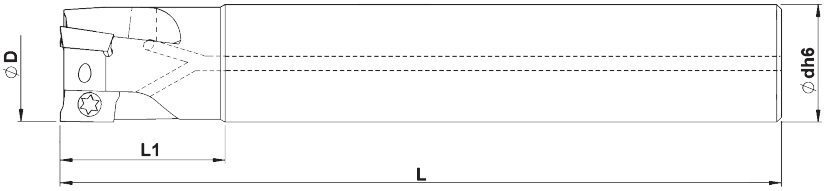

SERIE LUNGA ATTACCO CILINDRICO - Long Series Cylindrical Shank						INSERTO Insert	VITE Screw	TORX Key	
CODICE / Code	Ø D	L1	L	Ø dh6	Z	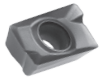			Kg
V90AP16025CLW20Z2R	25	40	180	20	2	AP..1604	VM4008	T15	0,404
V90AP16025CLW24Z2R	25	40	180	24	2	AP..1604	VM4008	T15	0,564
V90AP16032CLW25Z3R	32	60	180	25	3	AP..1604	VM4010	T15	0,670
V90AP16032CLW32Z3R	32	60	180	32	3	AP..1604	VM4010	T15	0,977

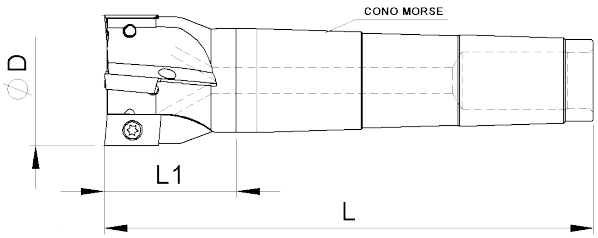

ATTACCO CONO MORSE - Morse Shank						INSERTO Insert	VITE Screw	TORX Key	
CODICE / Code	Ø D	L1	L	CONO MORSE	Z				Kg
V90AP16032CM3WZ3R	32	40	125	CM3	3	AP..1604	VM4010	T15	0,370
V90AP16040CM4WZ4R	40	48	157	CM4	4	AP..1604	VM4010	T15	0,751

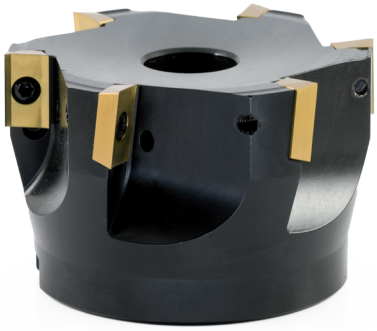

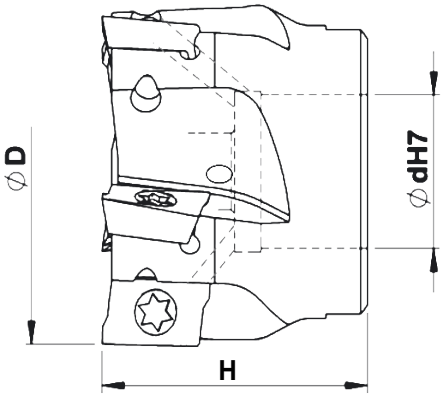

ATTACCO A MANICOTTO - Shell Shank					INSERTO Insert	VITE Screw	TORX Key	
CODICE / Code	Ø D	H	Ø dH7	Z				Kg
V90AP16040MWZ4R	40	40	16	4	AP..1604	VM4010	T15	0,168
V90AP16050MWZ5R	50	40	22	5	AP..1604	VM4010	T15	0,268
V90AP16052MWZ5R	52	40	22	5	AP..1604	VM4010	T15	0,292
V90AP16063MWZ5R	63	40	22	5	AP..1604	VM4010	T15	0,490
V90AP16063MWZ6R	63	40	22	6	AP..1604	VM4010	T15	0,478
V90AP16080MWZ6R	80	50	27	6	AP..1604	VM4010	T15	1,136
V90AP16100MWZ7R	100	50	32	7	AP..1604	VM4010	T15	1,723
V90AP16125MZ8R	125	63	40	8	AP..1604	VM4010	T15	3,053
V90AP16160MZ10R	160	63	40	10	AP..1604	VM4010	T15	6,025

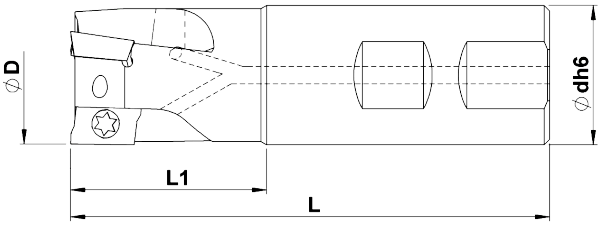

ATTACCO WELDON - Weldon Shank						INSERTO Insert	VITE Screw	TORX Key	
CODICE / Code	Ø D	L1	L	Ø dh6	Z				Kg
V90AD1505025WWZ2R	25	44	100	25	2	ADKT1505	VM4010	T15	0,293
V90AD1505032WWZ3R	32	50	110	32	3	ADKT1505	VM4010	T15	0,555
V90AD1505040WWZ4R	40	45	115	32	4	ADKT1505	VM4010	T15	0,700

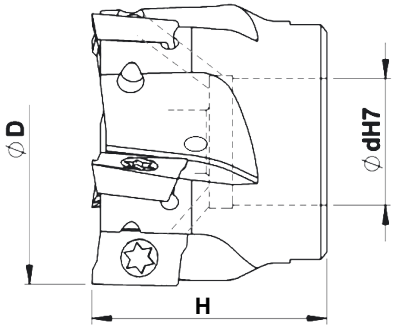

ATTACCO A MANICOTTO - Shell Shank					INSERTO Insert	VITE Screw	TORX Key	
CODICE / Code	Ø D	H	Ø dH7	Z				Kg
V90AD1505040MWZ4R	40	45	16	4	ADKT1505	VM4010	T15	0,196
V90AD1505050MWZ5R	50	40	22	5	ADKT1505	VM4010	T15	0,277
V90AD1505063MWZ6R	63	40	22	6	ADKT1505	VM4010	T15	0,510
V90AD1505080MWZ7R	80	50	27	7	ADKT1505	VM4010	T15	1,175
V90AD1505100MWZ8R	100	50	32	8	ADKT1505	VM4010	T15	1,833
V90AD1505125MZ9R	125	63	40	9	ADKT1505	VM4010	T15	2,900

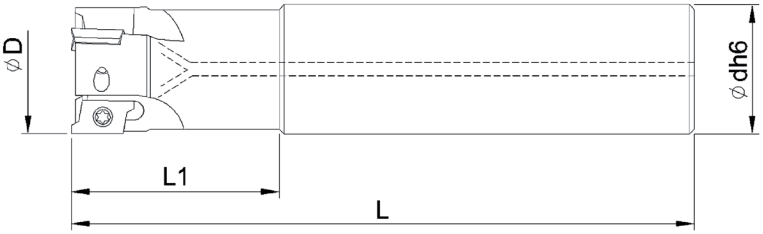

SERIE EXTRA LUNGA ATTACCO CILINDRICO - Extra long Series Cylindrical Shank						INSERTO Insert	VITE Screw	TORX Key	
CODICE / Code	Ø D	L1	L	Ø dh6	Z				Kg
V90RT10016WXLZ2R-16	16	30	160	16	2	RT 1003/T3	VM2506B	T08IP	0,215
V90RT10016WXLZ2R-15	16	25	160	15	2	RT 1003/T3	VM2506B	T08IP	0,190
V90RT10020WXLZ3R-20	20	30	200	20	3	RT 1003/T3	VM2506B	T08IP	0,430
V90RT10020WXLZ3R-19	20	25	200	19	3	RT 1003/T3	VM2506B	T08IP	0,400
V90RT10025WXLZ3R-25	25	30	200	25	3	RT 1003/T3	VM2506B	T08IP	0,685
V90RT10025WXLZ3R-24	25	25	200	24	3	RT 1003/T3	VM2506B	T08IP	0,630
V90RT13020WXLZ2R-20	20	30	200	20	2	RT 1304..	VM30IP	T09IP	0,410
V90RT13020WXLZ2R-19	20	30	200	19	2	RT 1304..	VM30IP	T09IP	0,380
V90RT13025WXLZ3R-25	25	35	200	25	3	RT 1304..	VM30IP	T09IP	0,670
V90RT13025WXLZ3R-24	25	35	200	24	3	RT 1304..	VM30IP	T09IP	0,620
V90RT13032WXLZ4R-32	32	40	200	32	4	RT 1304..	VM30IP	T09IP	1,123
						Non disponibili *not available*			

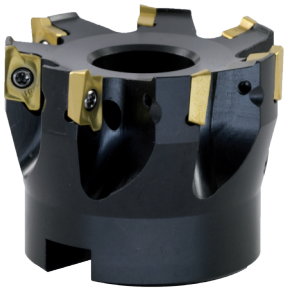

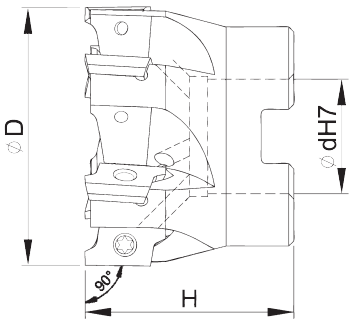

ATTACCO A MANICOTTO - Shell Shank					INSERTO Insert	VITE Screw	TORX Key	
CODICE / Code	Ø D	H	Ø dH7	Z				Kg
V90RT10040MWZ6R	40	40	16	6	RT 1003/T3	VM2506B	T08IP	0,190
V90RT10050MWZ7R	50	40	22	7	RT 1003/T3	VM2506B	T08IP	0,290
V90RT13040MWZ5R	40	40	16	5	RT 1304..	VM30IP	T09IP	0,172
V90RT13050MWZ6R	50	40	22	6	RT 1304..	VM30IP	T09IP	0,275
V90RT13063MWZ7R	63	40	22	7	RT 1304..	VM30IP	T09IP	0,500
					Non disponibili *not available*			

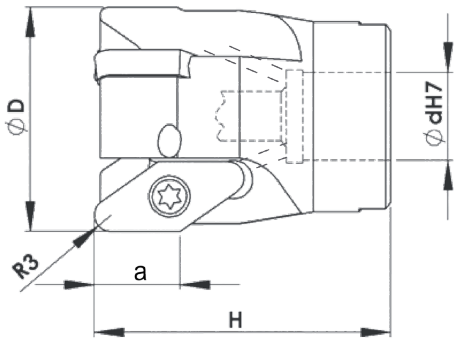

ATTACCO A MANICOTTO - Shell Shank						INSERTO Insert	VITE Screw	TORX Key	
CODICE / Code	Ø D	H	Ø dH7	a	Z	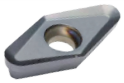			Kg
V90VC22042MWZ3R	42	57	16	15	3	VC..220530	VM4511	T20	0,252
V90VC22052MWZ3R	52	57	22	15	3	VC..220530	VM4511	T20	0,370
V90VC22066MWZ4R	66	57	27	15	4	VC..220530	VM4511	T20	0,624
V90VC22080MWZ4R	80	57	27	15	4	VC..220530	VM4511	T20	1,073
V90VC22100MZ5R	100	50	32	15	5	VC..220530	VM4511	T20	1,500
V90VC22125MZ6R	125	50	40	15	6	VC..220530	VM4511	T20	2,345

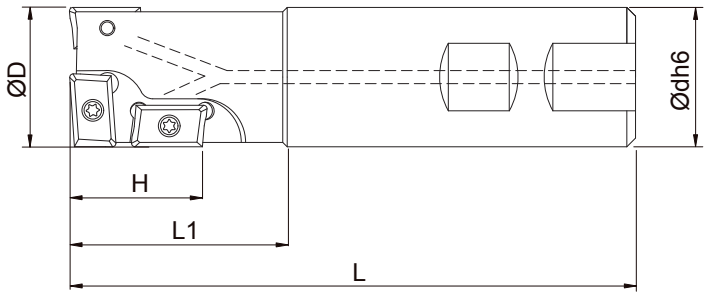

ATTACCO WELDON - Weldon Shank								INSERTO Insert	VITE Screw	TORX Key	
CODICE / Code	Ø D	H	L1	L	Ø dh6	N° Inserti Inserts	Z	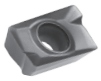			Kg
V90RFAP10020WWZ3R	20	17	35	90	20	3	2	AP..1003	VM2506	T08	0,170
V90RFAP16032WWZ3R	32	30	50	130	32	3	2	AP..1604	VM4010	T15	0,655

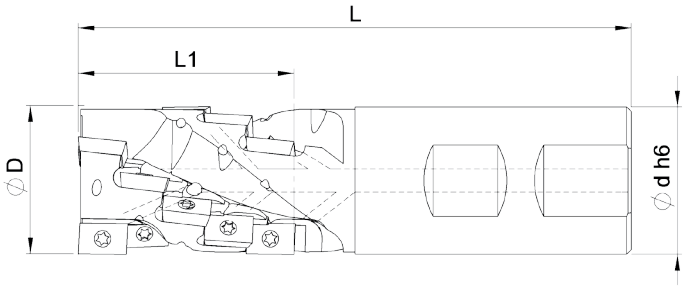

ATTACCO WELDON - Weldon Shank							INSERTO Insert	VITE Screw	TORX Key	
CODICE / Code	Ø D	L1	L	Ø dh6	Nr. INSERTI *Inserts*	Z	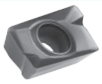			Kg
V90RAP10025WW0208	25	36	100	25	8	2	AP..1003	VM2506	T08	0,282
V90RAP10032WW0315	32	45	120	32	15	3	AP..1003	VM2506	T08	0,570

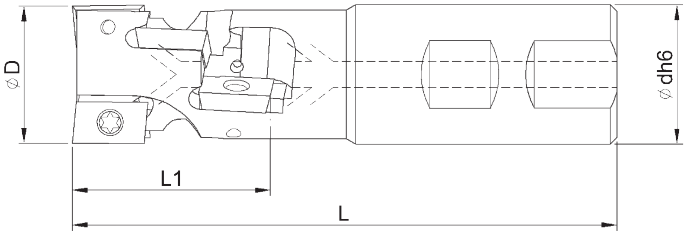

ATTACCO WELDON - Weldon Shank							INSERTO Insert	VITE Screw	TORX Key	
CODICE / Code	Ø D	L1	L	Ø dh6	Nr. INSERTI *Inserts*	Z	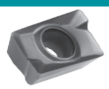			Kg
V90RAP16032WW0206	32	45	125	32	6	2	AP..1604	VM4010	T15	0,578
V90RAP16040WW0210	40	70	160	40	10	2	AP..1604	VM4010	T15	1,162
V90RAP16040WW0309	40	44	140	40	9	3	AP..1604	VM4010	T15	1,050

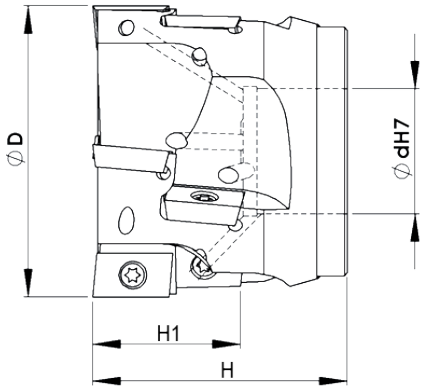

ATTACCO A MANICOTTO - Shell Shank							INSERTO Insert	VITE Screw	TORX Key	
CODICE / Code	Ø D	H1	H	Ø dH7	Z	Nr. INSERTI Inserts				Kg
V90RAP16050MW0408	50	30	55	27	4	8	AP..1604	VM4010	T15	0,393
V90RAP16050MW0309	50	44	70	27	3	9	AP..1604	VM4010	T15	0,533
V90RAP16063MW0408	63	30	55	27	4	8	AP..1604	VM4010	T15	0,785
V90RAP16063MW0412	63	44	60	27	4	12	AP..1604	VM4010	T15	0,770
V90RAP16063MW0510	63	30	55	27	5	10	AP..1604	VM4010	T15	0,723
V90RAP16080MW0408	80	30	55	32	4	8	AP..1604	VM4010	T15	1,220
V90RAP16080MW0515	80	44	60	32	5	15	AP..1604	VM4010	T15	1,192
V90RAP16100MW0530	100	80	100	40	5	30	AP..1604	VM4010	T15	3,830

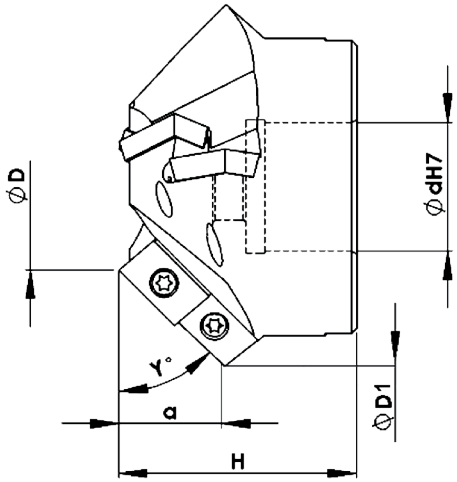

ATTACCO A MANICOTTO - Shell Shank								INSERTO Insert	VITE Screw	TORX Key	
CODICE / Code	Ø D	Ø D1	a	H	Ø dH7	Y°	Z				Kg
V10AP16035MZ3+3R	35	96	5,2	50	27	10	3+3	AP..1604	VM4010	T15	1,164
V15AP16035MZ3+3R	35	95	7,5	50	27	15	3+3	AP..1604	VM4010	T15	1,142
V30AP16035MZ3+3R	35	87,5	15	50	27	30	3+3	AP..1604	VM4010	T15	0,966
V40AP16035MZ3+3R	35	81,5	19,2	50	27	40	3+3	AP..1604	VM4010	T15	0,790
V45AP16035MZ3+3R	35	77,6	21	50	27	45	3+3	AP..1604	VM4010	T15	0,770
V60AP16035MZ3+3R	35	64,8	25,6	50	27	60	3+3	AP..1604	VM4010	T15	0,550
V75AP16035MZ3+3R	35	50,7	29,2	60	22	75	3+3	AP..1604	VM4010	T15	0,480

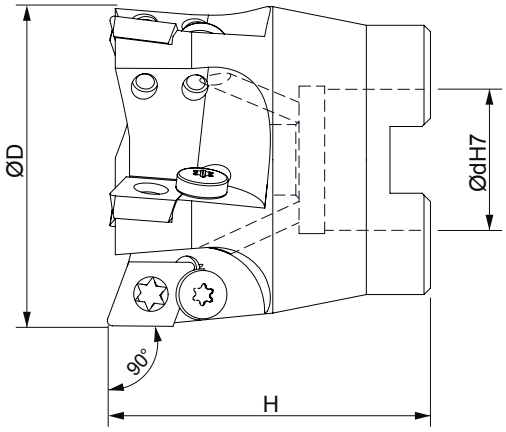

ATTACCO A MANICOTTO - Shell Shank					INSERTO Insert	VITE Screw	VITE FISSAGGIO Fixing Screw	TORX Key	
CODICE / Code	Ø D	H	Ø dH7	Z					Kg
V90XD10040MWZ4R	40	40	16	4	XD..10T3	VM359	OM3505	T15	0,163
V90XD10050MWZ5R	50	50	22	5	XD..10T3	VM359	OM3505	T15	0,370
V90XD10052MWZ5R	52	50	22	5	XD..10T3	VM359	OM3505	T15	0,395
V90XD10063MWZ6R	63	50	27	6	XD..10T3	VM359	OM3505	T15	0,580

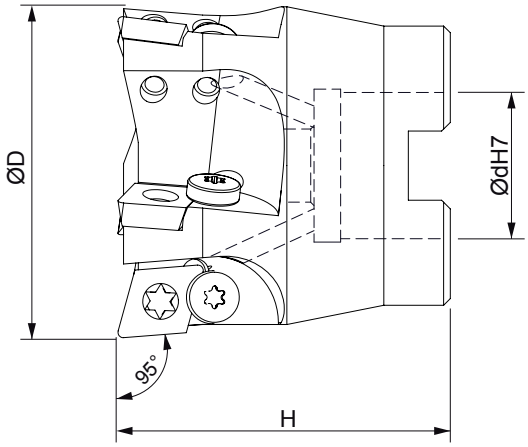

ATTACCO A MANICOTTO - Shell Shank					INSERTO Insert	VITE Screw	VITE FISSAGGIO Fixing Screw	TORX Key	
CODICE / Code	Ø D	H	Ø dH7	Z					Kg
V95XD10040MWZ4R	40	40	16	4	XD..10T3	VM359	OM3505	T15	0,140
V95XD10050MWZ5R	50	50	22	5	XD..10T3	VM359	OM3505	T15	0,350
V95XD10052MWZ5R	52	50	22	5	XD..10T3	VM359	OM3505	T15	0,378

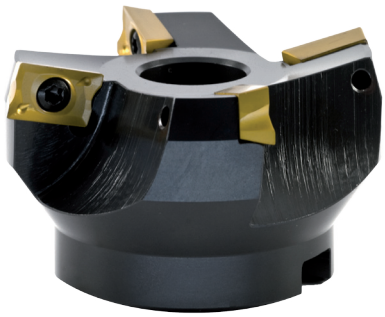

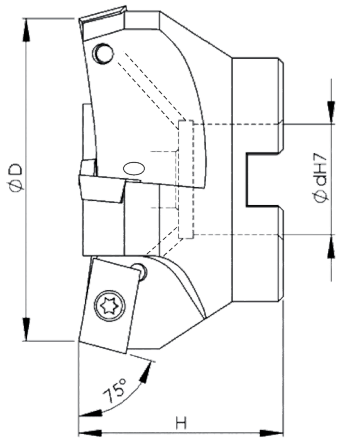

ATTACCO MANICOTTO - Shell Shank					INSERTO Insert	VITE Screw	TORX Key	
CODICE / Code	Ø D	H	Ø dH7	Z	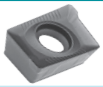			Kg
V75AD1505063MWZ4R	63	40	22	4	ADKT1505	VM4010	T15	0,470
V75AD1505080MWZ5R	80	50	27	5	ADKT1505	VM4010	T15	0,980
V75AD1505100MWZ6R	100	50	32	6	ADKT1505	VM4010	T15	1,667

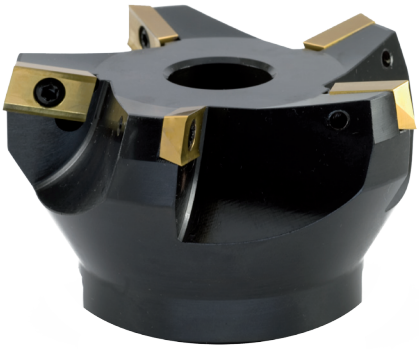

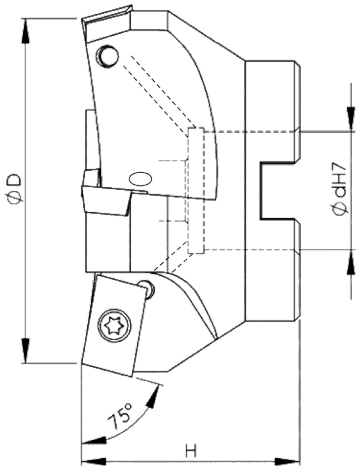

ATTACCO MANICOTTO - Shell Shank					INSERTO Insert	VITE Screw	TORX Key	
CODICE / Code	Ø D	H	Ø dH7	Z	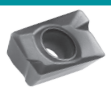			Kg
V75AP16063MWZ4R	63	40	22	4	AP..1604	VM4010	T15	0,440
V75AP16080MWZ5R	80	50	27	5	AP..1604	VM4010	T15	0,970
V75AP16100MWZ6R	100	50	32	6	AP..1604	VM4010	T15	1,695

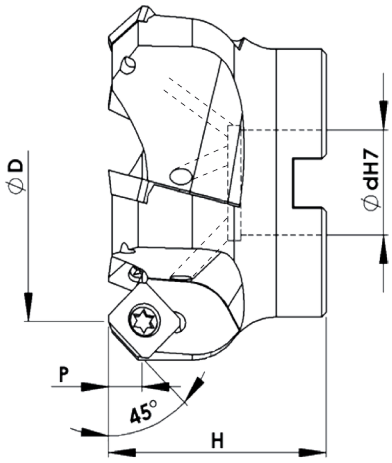

ATTACCO A MANICOTTO - Shell Shank						INSERTO Insert	VITE Screw	TORX Key	
CODICE / Code	Ø D	H	Ø dH7	P	Z				Kg
V45SD1204050MWZ4R	50	45	22	6	4	SDKT 1204	VM4510	T20	0,394
V45SD1204063MWZ5R	63	45	22	6	5	SDKT 1204	VM4510	T20	0,604
V45SD1204080MWZ6R	80	50	27	6	6	SDKT 1204	VM4510	T20	1,160
V45SD1204100MWZ7R	100	55	32	6	7	SDKT 1204	VM4510	T20	2,140
V45SD1204125MZ8R	125	63	40	6	8	SDKT 1204	VM4510	T20	2,854

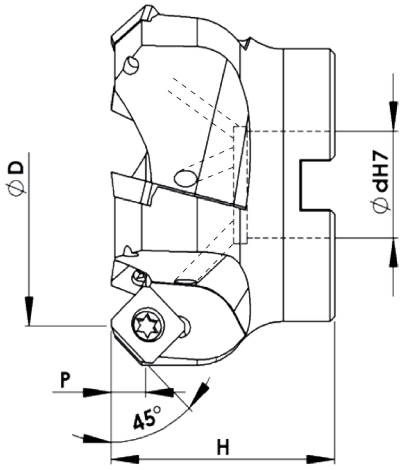

ATTACCO A MANICOTTO - Shell Shank						INSERTO Insert	VITE Screw	TORX Key	
CODICE / Code	Ø D	H	Ø dH7	P	Z				Kg
V45SE1204040MWZ3R	40	40	16	6	3	SE..1204	VM5009	T20	0,290
V45SE1204050MWZ4R	50	48	22	6	4	SE..1204	VM5010	T20	0,488
V45SE1204063MWZ5R	63	48	22	6	5	SE..1204	VM5010	T20	0,744
V45SE1204080MWZ6R	80	50	27	6	6	SE..1204	VM5010	T20	1,156
V45SE1204100MWZ6R	100	50	32	6	6	SE..1204	VM5010	T20	2,135
V45SE1204125MZ7R	125	63	40	6	7	SE..1204	VM5010	T20	3,020
V45SE1204160MZ8R	160	63	40	6	8	SE..1204	VM5010	T20	5,400

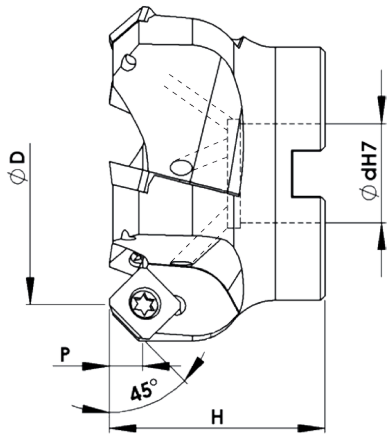

ATTACCO A MANICOTTO - Shell Shank						INSERTO Insert	VITE Screw	TORX Key	
CODICE / Code	Ø D	H	Ø dH7	P	Z	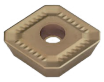			Kg
V45SE13T3040MWZ3R	40	40	16	6	3	SE..13T3	VM359	T15	0,297
V45SE13T3050MWZ4R	50	48	22	6	4	SE..13T3	VM3512	T15	0,475
V45SE13T3063MWZ5R	63	48	22	6	5	SE..13T3	VM3512	T15	0,768
V45SE13T3080MWZ6R	80	50	27	6	6	SE..13T3	VM3512	T15	1,095
V45SE13T3100MWZ6R	100	50	32	6	6	SE..13T3	VM3512	T15	1,520
V45SE13T3125MZ7R	125	63	40	6	7	SE..13T3	VM3512	T15	2,930
V45SE13T3160MZ8R	160	63	40	6	8	SE..13T3	VM3512	T15	5,130

SE13T3.. Intercambiabili con / *exchangeable with:* R245.. Sandvik

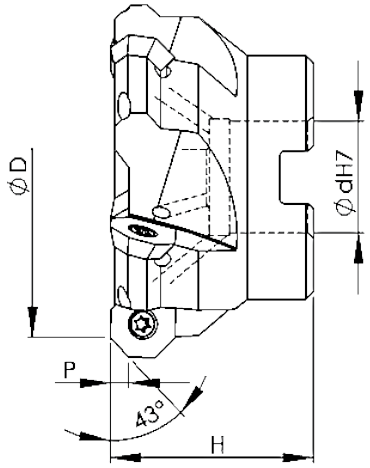

ATTACCO A MANICOTTO - Shell Shank						INSERTO Insert	VITE Screw	TORX Key	
CODICE / Code	Ø D	H	Ø dH7	P	Z				Kg
V43OF05032MWZ3R	32	40	16	3,50	3	OF.. 05T3	VM4010	T15	0,185
V43OF05040MWZ3R	40	40	16	3,50	3	OF.. 05T3	VM4010	T15	0,224
V43OF05050MWZ4R	50	40	22	3,50	4	OF.. 05T3	VM4010	T15	0,286
V43OF05050MWZ5R	50	40	22	3,50	5	OF.. 05T3	VM4010	T15	0,283
V43OF05063MWZ5R	63	40	22	3,50	5	OF.. 05T3	VM4010	T15	0,475
V43OF05080MWZ6R	80	50	27	3,50	6	OF.. 05T3	VM4010	T15	1,100
V43OF05100MWZ7R	100	50	32	3,50	7	OF.. 05T3	VM4010	T15	1,850
V43OF05125MZ8R	125	63	40	3,50	8	OF.. 05T3	VM4010	T15	2,978

Prodotti ordinabili solo su richiesta / *Products ordered only on request*

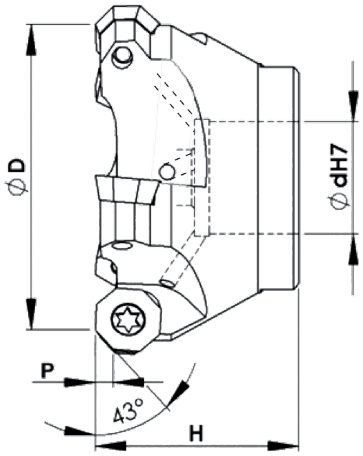

ATTACCO A MANICOTTO - Shell Shank						INSERTO Insert	VITE Screw	TORX Key	
CODICE / Code	Ø D	H	Ø dH7	P	Z				Kg
V43OD06050MWZ4R	50	40	22	4,5	4	OD.. 0605	VM5013	T20	0,317
V43OD06063MWZ5R	63	40	22	4,5	5	OD.. 0605	VM5013	T20	0,550
V43OD06080MWZ5R	80	50	27	4,5	5	OD.. 0605	VM5013	T20	1,030
V43OD06100MWZ6R	100	55	32	4,5	6	OD.. 0605	VM5013	T20	1,937
V43OD06125MZ7R	125	63	40	4,5	7	OD.. 0605	VM5013	T20	2,826
V43OD06160MZ9R	160	63	40	4,5	9	OD.. 0605	VM5013	T20	5,200

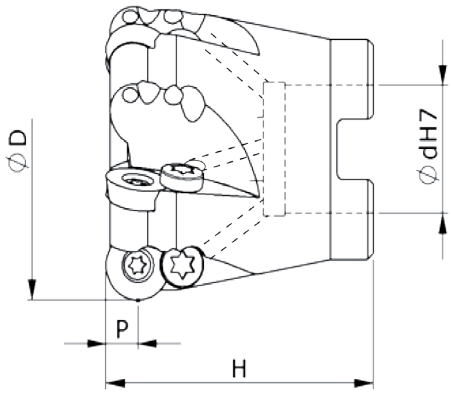

ATTACCO A MANICOTTO - Shell Shank						INSERTO Insert	VITE Screw	VITE FISSAGGIO Fixing Screw	TORX Key	
CODICE / Code	Ø D	H	Ø dH7	P	Z					Kg
V00RD12T3040MWZ4R	40	40	16	6	4	RD..12T3	VM359	OM3505	T15	0,170
V00RD12T3050MWZ5R	50	50	22	6	5	RD..12T3	VM359	OM3505	T15	0,345
V00RD12T3052MWZ4R	52	50	22	6	4	RD..12T3	VM359	OM3505	T15	0,328
V00RD12T3052MWZ5R	52	50	22	6	5	RD..12T3	VM359	OM3505	T15	0,340
V00RD12T3063MWZ6R	63	50	22	6	6	RD..12T3	VM359	OM3505	T15	0,470
V00RD12T3066MWZ6R	66	50	27	6	6	RD..12T3	VM359	OM3505	T15	0,568
V00RD12T3080MWZ7R	80	50	27	6	7	RD..12T3	VM359	OM3505	T15	0,928
V00RD12T3100MWZ8R	100	55	32	6	8	RD..12T3	VM359	OM3505	T15	1,773

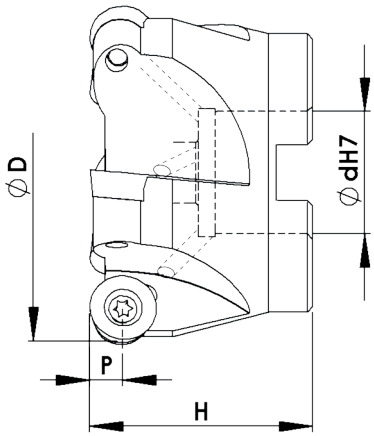

ATTACCO A MANICOTTO - Shell Shank						INSERTO Insert	VITE Screw	TORX Key	
CODICE / Code	Ø D1	H	Ø dH7	P	Z				Kg
V00RD1204040MWZ4R	40	40	16	6	4	RD..1204	VM4010	T15	0,173
V00RD1204050MWZ4R	50	50	22	6	4	RD..1204	VM4010	T15	0,293
V00RD1204052MWZ5R	52	50	22	6	5	RD..1204	VM4010	T15	0,360
V00RD1204063MWZ5R	63	50	27	6	5	RD..1204	VM4010	T15	0,567
V00RD1204080MWZ6R	80	50	27	6	6	RD..1204	VM4010	T15	0,890
V00RD1204100MWZ7R	100	55	32	6	7	RD..1204	VM4010	T15	1,930

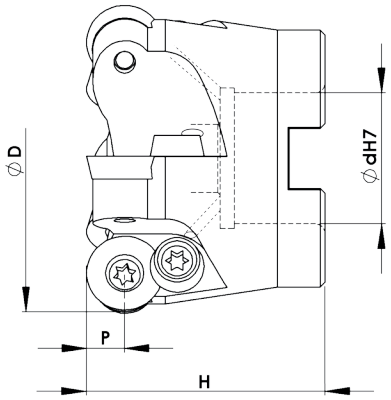

ATTACCO A MANICOTTO - Shell Shank						INSERTO Insert	VITE Screw	RONDELLA Lock Washer	VITE RONDELLA Screw Lock Washer	TORX Key	
CODICE / Code	Ø D	H	Ø dH7	P	Z						Kg
V00RD16050MWZ4R	50	50	22	8	4	RD..1604	VM4511	RO1104	VM4511	T20	0,330
V00RD16052MWZ4R	52	50	22	8	4	RD..1604	VM4511	RO1104	VM4511	T20	0,328
V00RD16063MWZ5R	63	50	27	8	5	RD..1604	VM4511	RO1104	VM4511	T20	0,485
V00RD16066MWZ5R	66	50	27	8	5	RD..1604	VM4511	RO1104	VM4511	T20	0,515
V00RD16080MWZ6R	80	50	27	8	6	RD..1604	VM4511	RO1104	VM4511	T20	0,865
V00RD16100MWZ7R	100	55	32	8	7	RD..1604	VM4511	RO1104	VM4511	T20	1,655
V00RD16125MZ8R	125	63	40	8	8	RD..1604	VM4511	RO1104	VM4511	T20	2,260
V00RD16160MZ9R	160	55	40	8	9	RD..1604	VM4511	RO1104	VM4511	T20	3,780

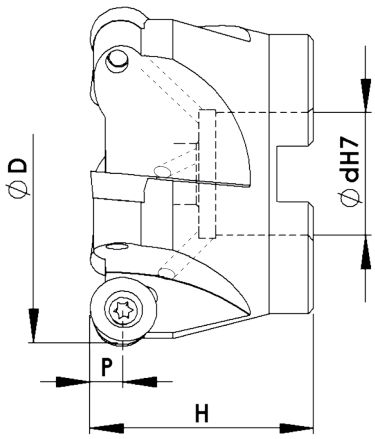

ATTACCO A MANICOTTO - Shell Shank						INSERTO Insert	VITE Screw	TORX Key	
CODICE / Code	Ø D1	H	Ø dH7	P	Z				Kg
V00RP12040MWZ4R	40	40	16	6	4	RP..1204	VM4010	T15	0,160
V00RP12050MWZ4R	50	50	22	6	4	RP..1204	VM4010	T15	0,205
V00RP12052MWZ4R	52	50	22	6	4	RP..1204	VM4010	T15	0,270
V00RP12063MWZ5R-22	63	50	22	6	5	RP..1204	VM4010	T15	0,570
V00RP12063MWZ5R-27	63	50	27	6	5	RP..1204	VM4010	T15	0,525
V00RP12066MWZ5R	66	50	27	6	5	RP..1204	VM4010	T15	0,594
V00RP12080MWZ6R	80	50	27	6	6	RP..1204	VM4010	T15	0,910
V00RP12100MWZ7R	100	55	32	6	7	RP..1204	VM4010	T15	0,817

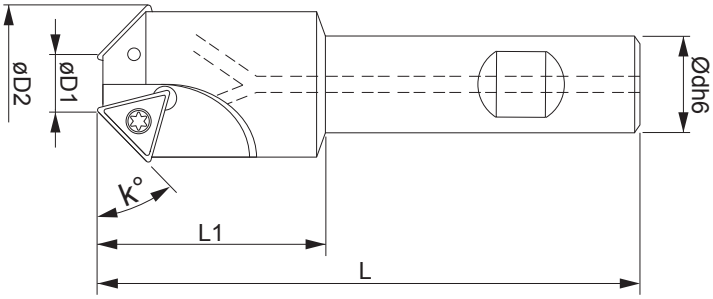

ATTACCO WELDON - Weldon Shank								INSERTO Insert	VITE Screw	TORX Key	
CODICE / Code	Ø D1	Ø D2	L1	L	Ø dh6	K°	Z				Kg
V30TC16032WWZ2R	7	32	39	95	20	30	2	TC..16T308	VM4010	T15	0,267
V45TC11016WZ1R	1,8	15,5	20	70	12	45	1	TC..110204	VM250	T07	0,056
V45TC11021WZ2R	6	20	35	90	20	45	2	TC..110204	VM250	T07	0,187
V45TC16020WWZ1R	0	21	45	95	20	45	1	TCMX 16T308	D4010T	T15	0,206
V45TC16325WWZ2R	12,5	32,5	39	95	25	45	2	TC..16T308	VM4010	T15	0,335
V60TC11016WZ1R	5,4	15,3	20	70	12	60	1	TC..110204	VM250	T07	0,056
V60TC11026WWZ2R	15,8	25,7	35	90	20	60	2	TC..110204	VM250	T07	0,213
V60TC16035WWZ2R	20	34	39	95	25	60	2	TC..16T308	VM4010	T15	0,350
V45SOMX11016CZ1R	0	15	30	100	16	45	1	SOMX 11T308	VM358	T15	0,130

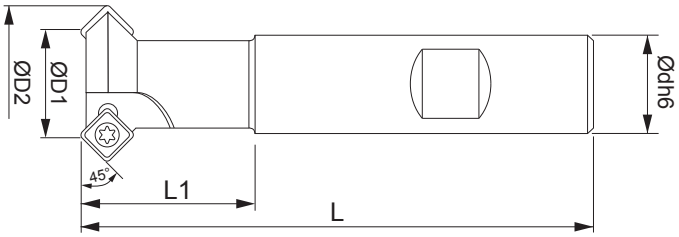

ATTACCO WELDON - Weldon Shank							INSERTO Insert	VITE Screw	TORX Key	
CODICE / Code	Ø D1	Ø D2	L	L1	Ø dh6	Z				Kg
V45SC09012WZ1R	12	24,8	100	25	20	1	SC..09T3	VM4010	T15	0,226
V45SC09016WZ2R	16	28,5	100	35	16	2	SC..09T3	VM4010	T15	0,190
V45SC09030WZ3R	30	42,8	100	35	25	3	SC..09T3	VM4010	T15	0,415
V45SC09012WLZ1R	12	23,7	200	25	20	1	SC..09T3	VM4010	T15	0,468
V45SC09016WLZ2R	16	28,8	200	42	20	2	SC..09T3	VM4010	T15	0,439
V45SC09030WLZ3R	30	42,3	200	40	25	3	SC..09T3	VM4010	T15	0,800

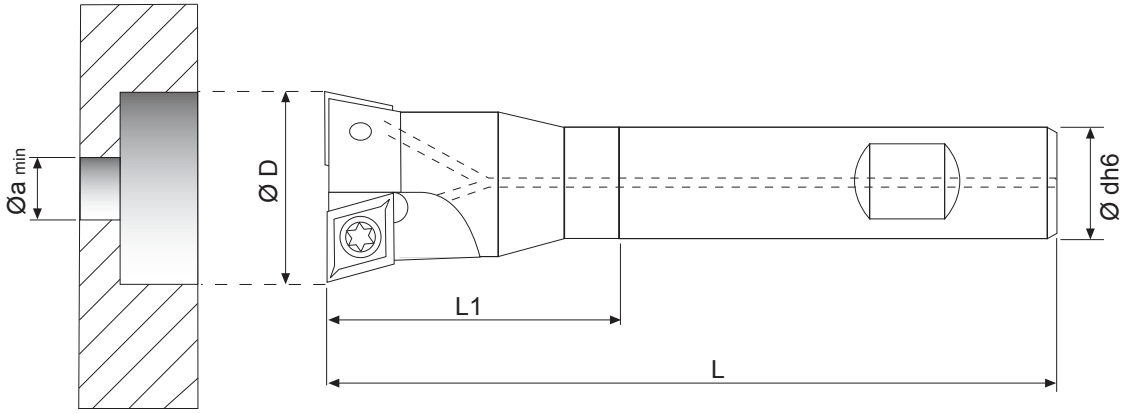

ATTACCO WELDON - Weldon Shank							INSERTO Insert	VITE Screw	TORX Key	
CODICE / Code	Ø D	Ø a min	L1	L	Ø dh6	Z				Kg
V18CC06015WWZ1R	15	5	30	85	12	1	CC.. 0602	VM250	T07	0,063
V18CC06016WWZ2R	16	5	30	92	12	2	CC.. 0602	VM250	T07	0,105
V18CC06017WWZ2R	17	6	32	94	16	2	CC.. 0602	VM250	T07	0,112
V18CC06175WWZ2R	17,5	6,5	40	96	16	2	CC.. 0602	VM250	T07	0,122
V18CC06018WWZ2R	18	7	41	97	16	2	CC.. 0602	VM250	T07	0,120
V18CC06019WWZ2R	19	8	41	100	16	2	CC.. 0602	VM250	T07	0,127
V18CC06020WWZ2R	20	9	41	102	16	2	CC.. 0602	VM250	T07	0,130
V18CC06021WWZ2R	21	10	41	105	16	2	CC.. 0602	VM250	T07	0,144
V18CC06022WWZ2R	22	11	41	110	16	2	CC.. 0602	VM250	T07	0,164
V18CC06023WWZ2R	23	12	41	112	16	2	CC.. 0602	VM250	T07	0,170
V18CC06024WWZ2R	24	13	41	115	16	2	CC.. 0602	VM250	T07	0,170
V18CC09025WWZ2R	25	8	40	120	16	2	CC.. 09T3	VM4008	T15	0,167
V18CC09026WWZ2R	26	9	55	125	20	2	CC.. 09T3	VM4008	T15	0,267
V18CC09027WWZ2R	27	10	55	128	20	2	CC.. 09T3	VM4008	T15	0,280
V18CC09028WWZ2R	28	11	55	130	20	2	CC.. 09T3	VM4008	T15	0,290
V18CC09029WWZ2R	29	12	55	132	20	2	CC.. 09T3	VM4008	T15	0,296
V18CC09030WWZ2R	30	13	55	134	20	2	CC.. 09T3	VM4008	T15	0,314
V18CC09031WWZ2R	31	14	55	136	20	2	CC.. 09T3	VM4008	T15	0,345
V18CC09032WWZ2R	32	15	55	138	20	2	CC.. 09T3	VM4010	T15	0,360
V18CC09033WWZ2R	33	16	55	140	20	2	CC.. 09T3	VM4010	T15	0,390
V18CC09034WWZ2R	34	16	60	140	25	2	CC.. 09T3	VM4010	T15	0,523
V18CC09035WWZ2R	35	17	60	140	25	2	CC.. 09T3	VM4010	T15	0,527
V18CC09038WWZ2R	38	20	60	140	25	2	CC.. 09T3	VM4010	T15	0,594
V18CC09042WWZ2R	42	24	60	140	25	2	CC.. 09T3	VM4010	T15	0,665

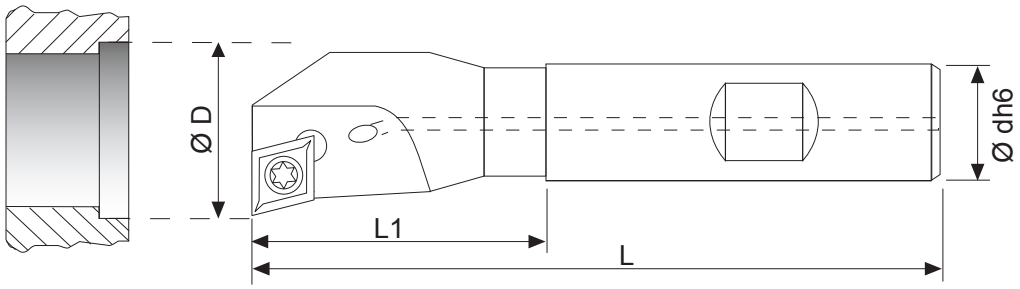

ATTACCO WELDON - Weldon Shank						INSERTO Insert	VITE Screw	TORX Key	
CODICE / Code	Ø D	L1	L	Ø dh6	Z				Kg
V90CC06010WWZ1R	9,8	23	90	8	1	CC.. 0602	VM250	T07	0,028
V90CC06011WWZ1R	10,8	24	105	10	1	CC.. 0602	VM250	T07	0,046
V90CC06012WWZ1R	11,8	25	105	10	1	CC.. 0602	VM250	T07	0,053
V90CC06013WWZ1R	12,8	25	105	10	1	CC.. 0602	VM250	T07	0,050
V90CC06014WWZ1R	13,8	27	110	12	1	CC.. 0602	VM250	T07	0,076
V90CC06015WWZ1R	14,8	28	120	12	1	CC.. 0602	VM250	T07	0,086
V90CC06016WWZ1R	15,8	29	125	12	1	CC.. 0602	VM250	T07	0,093
V90CC06017WWZ1R	16,8	30	140	16	1	CC.. 0602	VM250	T07	0,183
V90CC06018WWZ1R	17,8	31	140	16	1	CC.. 0602	VM250	T07	0,184
V90CC06019WWZ1R	18,8	31	150	16	1	CC.. 0602	VM250	T07	0,193
V90CC06020WWZ1R	19,8	33	150	16	1	CC.. 0602	VM250	T07	0,195
V90CC09021WWZ1R	20,8	34	160	20	1	CC.. 09T3	VM4008	T15	0,329
V90CC09022WWZ1R	21,8	35	160	20	1	CC.. 09T3	VM4008	T15	0,331
V90CC09023WWZ1R	22,8	36	165	20	1	CC.. 09T3	VM4008	T15	0,342
V90CC09024WWZ1R	23,8	37	170	20	1	CC.. 09T3	VM4008	T15	0,362
V90CC09025WWZ1R	24,8	38	180	20	1	CC.. 09T3	VM4008	T15	0,390
V90CC09026WWZ1R	25,8	39	185	20	1	CC.. 09T3	VM4008	T15	0,395
V90CC09027WWZ1R	26,8	40	190	20	1	CC.. 09T3	VM4008	T15	0,420
V90CC09028WWZ1R	27,8	40	190	20	1	CC.. 09T3	VM4008	T15	0,420
V90CC09029WWZ1R	28,8	43	200	20	1	CC.. 09T3	VM4008	T15	0,448
V90CC09030WWZ1R	29,8	43	200	25	1	CC.. 09T3	VM4008	T15	0,665
V90CC09031WWZ1R	30,8	44	200	25	1	CC.. 09T3	VM4008	T15	0,690
V90CC09032WWZ1R	31,8	45	200	25	1	CC.. 09T3	VM4008	T15	0,690

NEW!

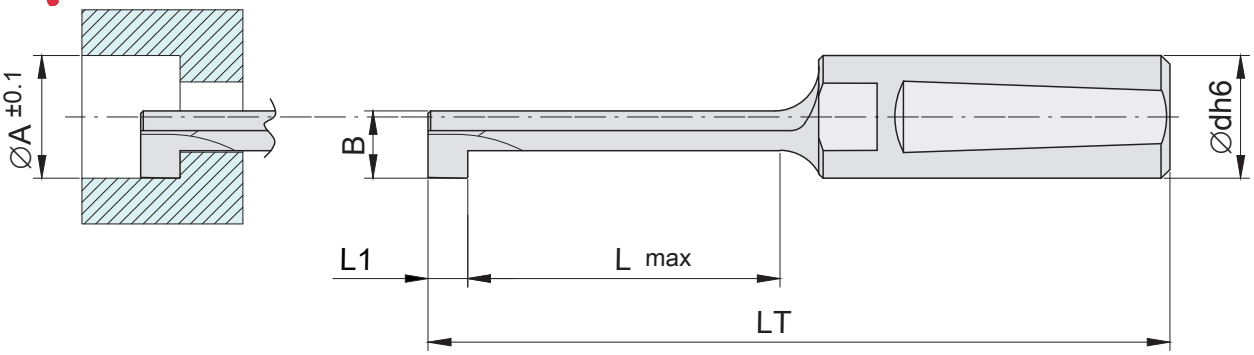

ATTACCO WHISTLE NOTCH - Whistle Notch Shank							
CODICE / Code	Ø A	B	L max	L1	LT	Ø dh6	FORO INGRESSO *Pre-Entry Hole* *(Minimum)*
VRLMD06/3,3R15	6	3,3	15	3,3	62	8	3,6
VRLMD06,5/3,6R16,3	6,5	3,6	16,3	3,3	62	8	3,9
VRLMD07/3,9R16,3	7	3,9	17,5	3,3	62	8	4,2
VRLMD07,5/4,1R18,8	7,5	4,1	18,8	3,3	62	8	4,4
VRLMD08/4,4R20	8	4,4	20	3,3	62	8	4,7
VRLMD08,5/4,7R21,3	8,5	4,7	21,3	3,5	72	10	5
VRLMD09/5R22,5	9	5	22,5	3,5	72	10	5,3
VRLMD09,5/5,2R23,8	9,5	5,2	23,8	3,5	72	10	5,5
VRLMD10/5,5R25	10	5,5	25	3,5	72	10	5,8
VRLMD10,5/5,8R26,3	10,5	5,8	26,3	3,5	82	12	6,1
VRLMD11/6,1R27,5	11	6,1	27,5	3,8	82	12	6,4
VRLMD11,5/6,3R28,8	11,5	6,3	28,8	3,8	82	12	6,6
VRLMD12/6,6R30	12	6,6	30	3,8	82	12	6,9
VRLMD12,5/6,9R31,3	12,5	6,9	31,3	3,8	85	14	7,2
VRLMD13/7,2R32,5	13	7,2	32,5	3,8	85	14	7,5
VRLMD13,5/7,4R33,8	13,5	7,4	33,8	3,8	88	14	7,7
VRLMD14/7,7R35	14	7,7	35	4,4	88	14	8
VRLMD14,5/08R36,3	14,5	8	36,3	4,4	96	16	8,3
VRLMD15/8,3R37,5	15	8,3	37,5	4,4	96	16	8,6
VRLMD15,5/8,5R38,8	15,5	8,5	38,8	4,4	96	16	8,8
VRLMD16/8,8R40	16	8,8	40	4,4	96	16	9,1

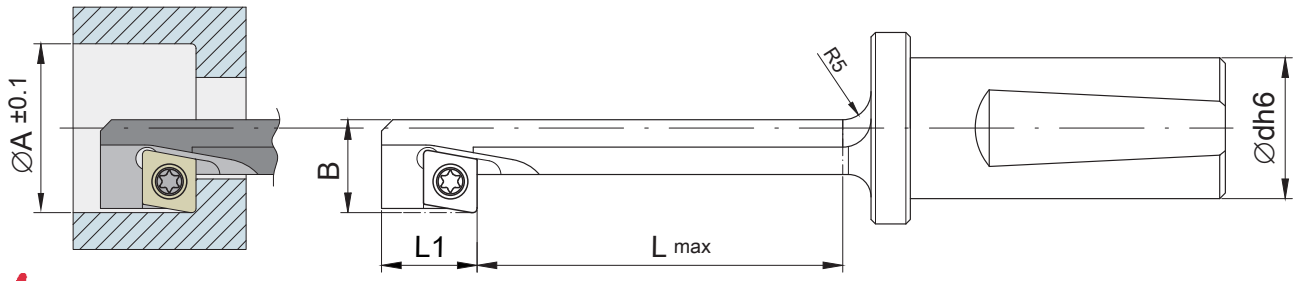

ATTACCO WHISTLE NOTCH - Whistle Notch Shank						INSERTO Insert	VITE Screw	TORX Key
CODICE / Code	Ø A	B	L max	L1	Ø dh6			
VRLCC06-018/9,9R40	18	9,9	40	12	20	CC.. 060204	VM250	T07
VRLCC06-019/10,5R47,5	19	10,5	47,5	12	20	CC.. 060204	VM250	T07
VRLCC06-020/11R45	20	11	45	12	20	CC.. 060204	VM250	T07
VRLCC06-021/11,6R52,5	21	11,6	52,5	12	20	CC.. 060204	VM250	T07
VRLCC06-022/12,1R55	22	12,1	55	12	20	CC.. 060204	VM250	T07
VRLCC09-023/12,7R57,5	23	12,7	57,5	17	20	CC.. 09T304	VM4008	T15
VRLCC09-024/13,2R50	24	13,2	50	17	20	CC.. 09T304	VM4008	T15
VRLCC09-025/13,8R62,5	25	13,8	62,5	17	20	CC.. 09T304	VM4008	T15
VRLCC09-026/14,3R60	26	14,3	60	17	20	CC.. 09T304	VM4008	T15
VRLCC09-027/14,9R67,5	27	14,9	67,5	17	20	CC.. 09T304	VM4008	T15
VRLCC09-028/15,4R70	28	15,4	70	17	20	CC.. 09T304	VM4008	T15
VRLCC09-029/16R72,5	29	16	72,5	17	25	CC.. 09T304	VM4008	T15
VRLCC09-030/16,5R65	30	16,5	65	17	25	CC.. 09T304	VM4008	T15
VRLCC09-031/17,1R77,5	31	17,1	77,5	17	25	CC.. 09T304	VM4008	T15
VRLCC09-032/17,6R80	32	17,6	80	17	25	CC.. 09T304	VM4008	T15
VRLCC09-033/18,2R75	33	18,2	75	17	25	CC.. 09T304	VM4008	T15
VRLCC09-034/18,7R85	34	18,7	85	17	25	CC.. 09T304	VM4008	T15
VRLCC12-035/19,3R87,5	35	19,3	87,5	23	25	CC.. 120408	VM5009	T20
VRLCC12-036/19,8R80	36	19,8	80	23	25	CC.. 120408	VM5009	T20
VRLCC12-037/20,4R92,5	37	20,4	92,5	23	25	CC.. 120408	VM5009	T20
VRLCC12-038/20,9R95	38	20,9	95	23	25	CC.. 120408	VM5009	T20
VRLCC12-039/21,5R97,5	39	21,5	97,5	23	25	CC.. 120408	VM5009	T20
VRLCC12-040/22R95	40	22	95	23	25	CC.. 120408	VM5009	T20

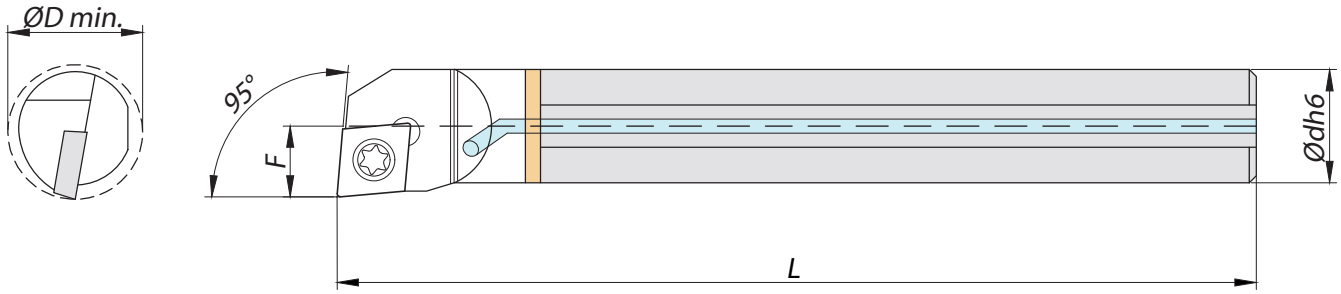

ATTACCO CILINDRICO CON PIATTO PARALLELO - Cylindrical Shank with Flat					INSERTO Insert	VITE Screw	TORX Key
CODICE / Code	Ø dh6	L	F	Ø D min.			
E08K SCLCR/L 06	08	125	5	10	CC..0602	VM250	T08
E10K SCLCR/L 06	10	125	6	12	CC..0602	VM250	T08
E12M SCLCR/L 06	12	150	7	14	CC..0602	VM250	T08
E16R SCLCR/L 09	16	200	10	19	CC..09T3	VM4008	T15
E20R SCLCR/L 09	20	200	12.5	23	CC..09T3	VM4008	T15
E25S SCLCR/L 09	25	250	14.5	28	CC..09T3	VM4008	T15
E32T SCLCR/L 09	32	300	19	36	CC..09T3	VM4008	T15

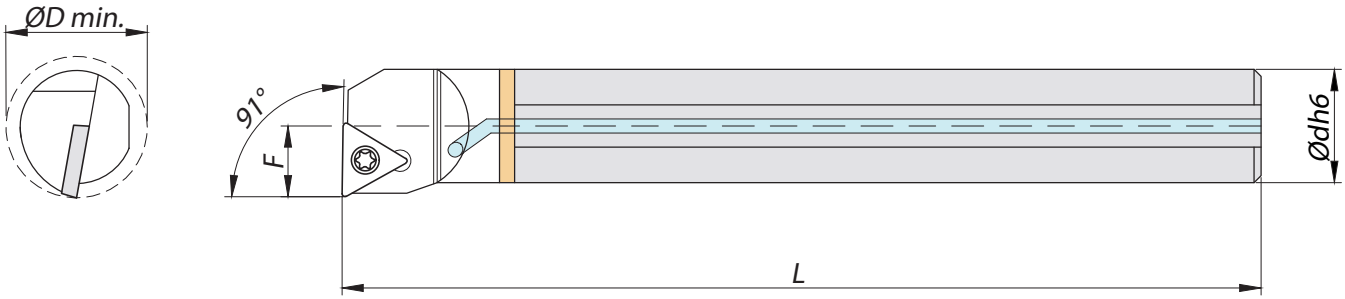

ATTACCO CILINDRICO CON PIATTO PARALLELO - Cylindrical Shank with Flat					INSERTO Insert	VITE Screw	TORX Key
CODICE / Code	Ø dh6	L	F	Ø D min.			
E10K STFCR/L 11	10	125	6	12	TC..1102	VM250	T08
E12M STFCR/L 11	12	150	8	15	TC..1102	VM250	T08
E16R STFCR/L 11	16	200	10	19	TC..1102	VM250	T08
E20R STFCR/L 11	20	200	13	24	TC..1102	VM250	T08

BARENI DI ALESATURA CON GAMBO IN METALLO DURO
Boring Tools with Carbide shaft

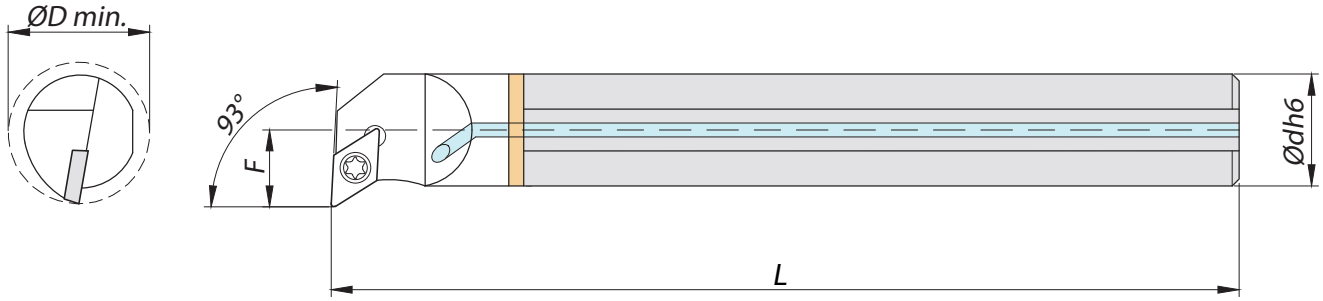

ATTACCO CILINDRICO CON PIATTO PARALLELO - Cylindrical Shank with Flat					INSERTO Insert	VITE Screw	TORX Key
CODICE / Code	Ø dh6	L	F	Ø D min.	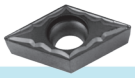		
E10K SDUCR/L 07	10	125	7	13	DC..0702	VM250	T08
E12M SDUCR/L 07	12	150	9	16	DC..0702	VM250	T08
E16Q SDUCR/L 07	16	180	11	20	DC..0702	VM250	T08
E16R SDUCR/L 11	16	200	11	20	DC..11T3	VM4008	T15
E20R SDUCR/L 11	20	200	13	24	DC..11T3	VM4008	T15
E25S SDUCR/L 11	25	250	16	29	DC..11T3	VM4008	T15

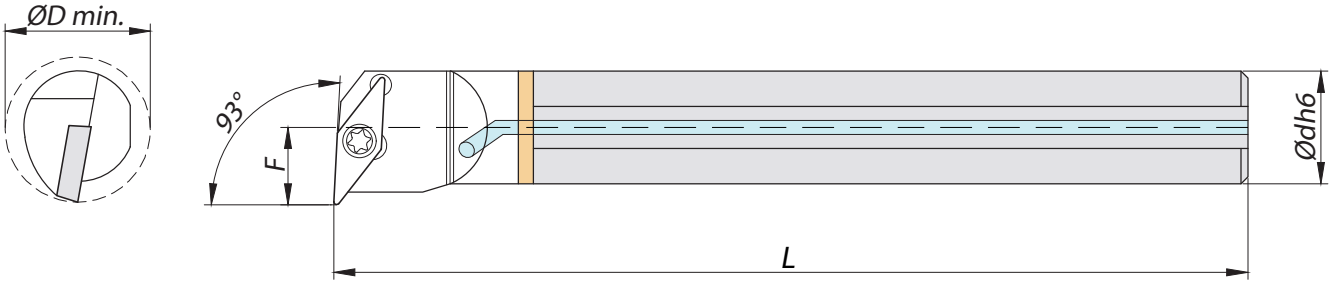

ATTACCO CILINDRICO CON PIATTO PARALLELO - Cylindrical Shank with Flat					INSERTO Insert	VITE Screw	TORX Key
CODICE / Code	Ø dh6	L	F	Ø D *Minimo*			
E16Q SVUCR/L 11	16	180	11	20	VC..1103	VM2506	T08
E20R SVUCR/L 11	20	200	13	24	VC..1103	VM2506	T08

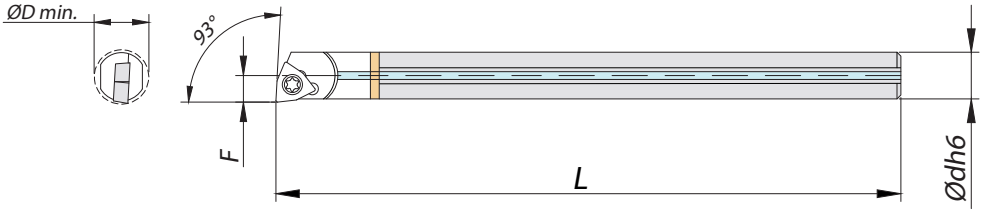

ATTACCO CILINDRICO CON PIATTO DI RIFERIMENTO - Cylindrical Shank with Flat					INSERTO Insert	VITE Screw	TORX Key
CODICE / Code	Ø dh6	L	F	Ø D min.			
E06G SWUCR/L 02	6	120	3.4	6.8	WC..02	WPM2,2x5	T07

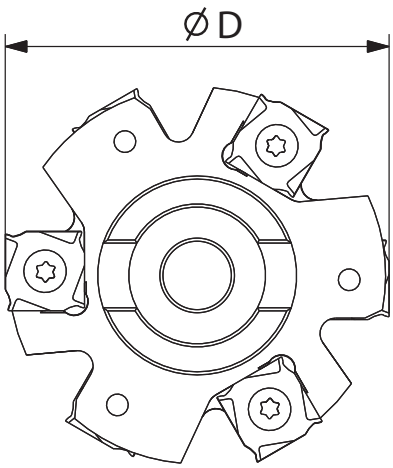

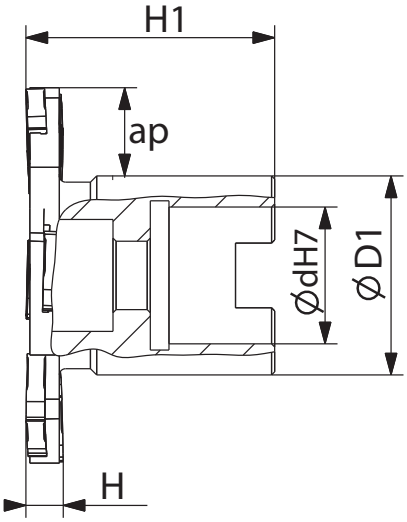

SERIE A DISCO / *Type* **VDM**								INSERTO Insert	VITE Screw	TORX Key	PESO Weight
CODICE / Code	Ø D	Ø D1	Ø dH7	H1	H	ap	Z	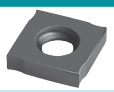			Kg
VDM063H4Z06-SN12	63	32	22	40	4	14	6	SNHX 1202..	VM432X	T08IP	0,200
VDM080H4Z08-SN12	80	40	22	50	4	18	8	SNHX 1202..	VM432X	T08IP	0,400
VDM100H4Z10-SN12	100	48	27	50	4	23	10	SNHX 1202..	VM432X	T08IP	0,600
VDM063H5Z06-SN12	63	32	22	40	5	14	6	SNHX 1203..	VM442X	T08IP	0,200
VDM080H5Z08-SN12	80	40	22	50	5	18	8	SNHX 1203..	VM442X	T08IP	0,400
VDM100H5Z10-SN12	100	48	27	50	5	23	10	SNHX 1203..	VM442X	T08IP	0,700
VDM063H6Z06-SN12	63	32	22	40	6	14	6	SNHX 1203..	VM451X	T15	0,200
VDM080H6Z08-SN12	80	40	22	50	6	18	8	SNHX 1203..	VM451X	T15	0,400
VDM100H6Z10-SN12	100	48	27	50	6	23	10	SNHX 1203..	VM451X	T15	0,700
VDM125H6Z12-SN12	125	70	40	50	6	30	12	SNHX 1203..	VM451X	T15	1,0
VDM160H6Z16-SN12	160	70	40	50	6	41	16	SNHX 1203..	VM451X	T15	1,3
VDM063H7Z06-SN12	63	32	22	40	7	12	6	SNHX 1204..	VM463X	T08IP	0,200
VDM080H7Z08-SN12	80	40	22	50	7	18	8	SNHX 1204..	VM463X	T08IP	0,500
VDM100H7Z10-SN12	100	48	27	50	7	23	10	SNHX 1204..	VM463X	T08IP	0,700
VDM125H7Z12-SN12	125	70	40	50	7	27	12	SNHX 1204..	VM463X	T08IP	1,1
VDM160H7Z16-SN12	160	70	40	50	7	41	16	SNHX 1204..	VM463X	T08IP	1,4
VDM063H8Z06-SN12	63	32	22	40	8	14	6	SNHX 12045..	VM463X	T08IP	0,200
VDM080H8Z08-SN12	80	40	22	50	8	18	8	SNHX 12045..	VM463X	T08IP	0,500
VDM100H8Z10-SN12	100	48	27	50	8	23	10	SNHX 12045..	VM463X	T08IP	0,800
VDM125H8Z12-SN12	125	70	40	50	8	27	12	SNHX 12045..	VM463X	T08IP	1,1
VDM160H8Z16-SN12	160	70	40	50	8	41	16	SNHX 12045..	VM463X	T08IP	1,5

SNHX 12

CODICE / Code	L	S	D
SNHX 1202...	12,7	2,30	12,7
SNHX 1203...	12,7	3,18	12,7
SNHX 1204...	12,7	4,0	12,7
SNHX 12045..	12,7	4,5	12,7

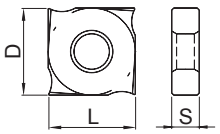

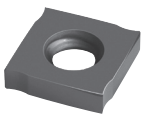

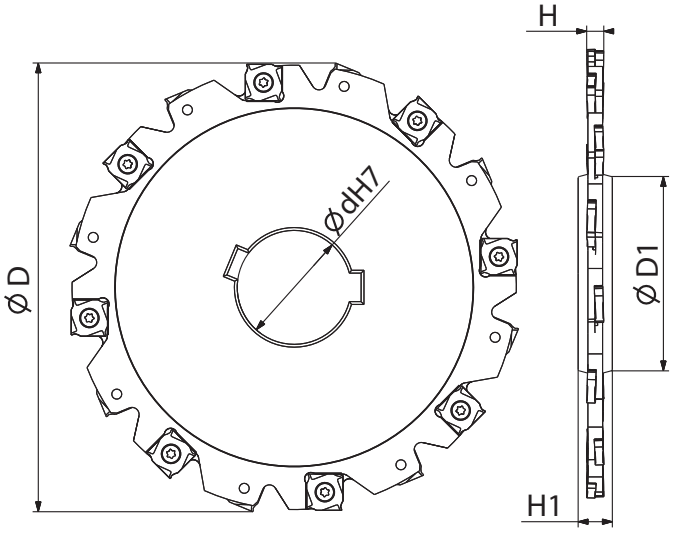

SERIE A DISCO / *Type* **VD**							INSERTO Insert	VITE Screw	TORX Key	PESO Weight
CODICE / Code	Ø D	Ø D1	Ø dH7	H	H1	Z	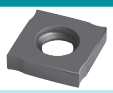			Kg
VD100H4Z10-SN12	100	40,7	27	4	12	10	SNHX 1202..	VM432X	T08IP	0,200
VD125H4Z12-SN12	125	50,5	40	4	12	12	SNHX 1202..	VM432X	T08IP	0,300
VD160H4Z16-SN12	160	66,7	40	4	12	16	SNHX 1202..	VM432X	T08IP	0,500
VD100H5Z10-SN12	100	45	27	5	12	10	SNHX 1203..	VM442X	T08IP	0,200
VD125H5Z12-SN12	125	58	40	5	12	12	SNHX 1203..	VM442X	T08IP	0,300
VD160H5Z16-SN12	160	68	40	5	12	16	SNHX 1203..	VM442X	T08IP	0,600
VD100H6Z10-SN12	100	45	27	6	12	10	SNHX 1203..	VM451X	T15	0,300
VD125H6Z12-SN12	125	58	40	6	12	12	SNHX 1203..	VM451X	T15	0,400
VD160H6Z16-SN12	160	68	40	6	12	16	SNHX 1203..	VM451X	T15	0,700
VD200H6Z18-SN12 *	200	72	50	6	12	18	SNHX 1203..	VM451X	T15	1,1
VD250H6Z24-SN12 *	250	72	50	6	12	24	SNHX 1203..	VM451X	T15	1,7
VD100H7Z10-SN12	100	45	27	7	12	10	SNHX 1204..	VM463X	T08IP	0,300
VD125H7Z12-SN12	125	58	40	7	12	12	SNHX 1204..	VM463X	T08IP	0,400
VD160H7Z16-SN12	160	68	40	7	12	16	SNHX 1204..	VM463X	T08IP	0,800
VD200H7Z18-SN12 *	200	72	50	7	12	18	SNHX 1204..	VM463X	T08IP	1,2
VD250H7Z24-SN12 *	250	72	50	7	12	24	SNHX 1204..	VM463X	T08IP	1,9
VD100H8Z10-SN12	100	45	27	8	12	10	SNHX 12045..	VM463X	T08IP	0,300
VD125H8Z12-SN12	125	58	40	8	12	12	SNHX 12045..	VM463X	T08IP	0,500
VD160H8Z16-SN12	160	68	40	8	12	16	SNHX 12045..	VM463X	T08IP	0,900
VD200H8Z18-SN12 *	200	72	50	8	12	18	SNHX 12045..	VM463X	T08IP	1,4
VD250H8Z24-SN12 *	250	72	50	8	12	24	SNHX 12045..	VM463X	T08IP	2,2

* Ø200 - Ø250 Ordinabili su richiesta / *ordered on request*

SNHX 12

CODICE / Code	L	S	D
SNHX 1202...	12,7	2,30	12,7
SNHX 1203...	12,7	3,18	12,7
SNHX 1204...	12,7	4,0	12,7
SNHX 12045..	12,7	4,5	12,7

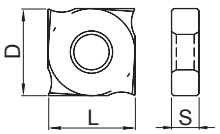

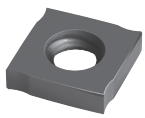

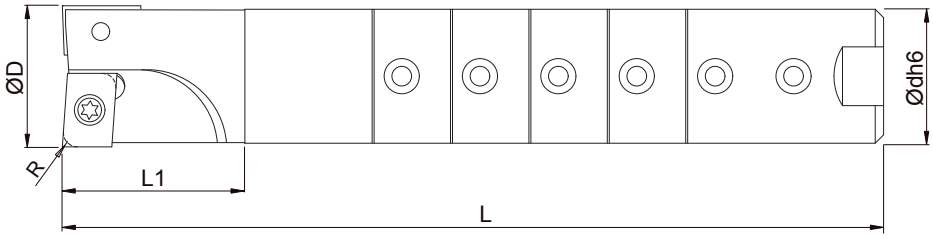

ATTACCO CILINDRICO MODULARE - Cylindrical Modular Shank							INSERTO LATERALE Outside Insert	INSERTO CENTRALE Inside Insert	VITE Screw	TORX Key	
CODICE / *Code*	Ø D	L1	L	Ø dh6	Z	R					Kg
FTF20	20	42	180	24	2	0,5	ADGW 0903 ZZTR	ADGW 1003 ZZTL	VM4006F	T15	0,526
FTF20R	20	42	180	24	2	4	ADGW 090340 TR	ADGW 100340 TL	VM4006F	T15	0,523
FTF25	25	40	180	24	2	0,5	ADGW 1503 ZZTR	ADGW 1203 ZZTL	VM4008F	T15	0,567
FTF25R	25	40	180	24	2	4	ADGW 150340 TR	ADGW 120340 TL	VM4008F	T15	0,565
FTF32	32	40	210	30	2	0,5	ADGW 1503 ZZTR	APGW 1904 ZZTL	VM4008F-VM5008	T15-T20	1,055
FTF32R	32	40	210	30	2	4	ADGW 150340 TR	APGW 190440 TL	VM4008F-VM5008	T15-T20	1,052
FTF36	36	40	210	34	2	0,5	APGW 2004 ZZTR	APGW 1904 ZZTL	VM5008	T20	1,325
FTF36R	36	40	210	34	2	4	APGW 200440 TR	APGW 190440 TL	VM5008	T20	1,322

Prodotti ordinabili solo su richiesta / *Products ordered only on request*

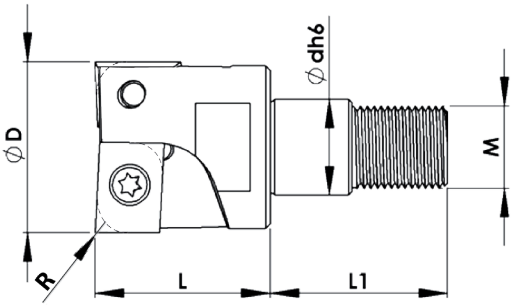

ATTACCO FILETTATO - Threaded Shank								INSERTO LATERALE Outside Insert	INSERTO CENTRALE Inside Insert	VITE Screw	TORX Key	
CODICE / *Code*	Ø D	L	L1	M	Ø dh6	Z	R					Kg
FF25	25	24	27	12	14	2	0,5	ADGW 1503 ZZTR	ADGW 1203 ZZTL	VM4008F	T15	0,070
FF25R	25	24	27	12	14	2	4	ADGW 150340 TR	ADGW 120340 TL	VM4008F	T15	0,070
FF36	36	32	37	18	20	2	0,5	APGW 2004 ZZTR	APGW 1904 ZZTL	VM5008	T20	0,190
FF36R	36	32	37	18	20	2	4	APGW 200440 TR	APGW 190440 TL	VM5008	T20	0,190

Prodotti ordinabili solo su richiesta / *Products ordered only on request*

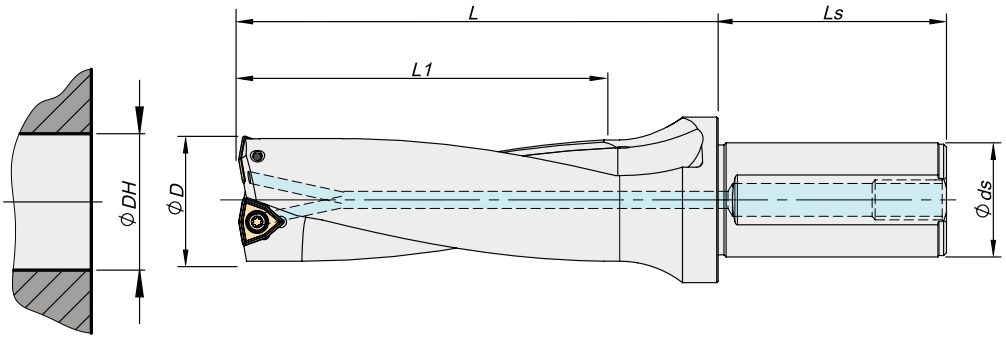

ØDH TOLLERANZA - *Tollerance* (mm)	
Ø D	3D
13 - 21,5	-0,10 / +0,15
22 - 50	-0,12 / +0,20
50 - 58	-0,15 / +0,25

Ø ds	Ls	BP/SP
20	44	PT-1/8
25	56	PT-1/8
32	60	PT-1/4
40	70	PT-1/4

ATTACCO CON PIATTO PARALLELO - Flat Shank					INSERTO Insert	VITE Screw	TORX Key
CODICE / Code	Ø D	Ø ds	L1	L			
WCV 16020-3D	16	20	51	66	WC.. 030208	VPM2,5x6	T08
WCV 16520-3D	16,5	20	53	68	WC.. 030208	VPM2,5x6	T08
WCV 17020-3D	17	20	54	69	WC.. 030208	VPM2,5x6	T08
WCV 17525-3D	17,5	25	56	71	WC.. 030208	VPM2,5x6	T08
WCV 18025-3D	18	25	57	72	WC.. 030208	VPM2,5x6	T08
WCV 18525-3D	18,5	25	59	74	WC.. 030208	VPM2,5x6	T08
WCV 19025-3D	19	25	60	75	WC.. 030208	VPM2,5x6	T08
WCV 19525-3D	19,5	25	62	77	WC.. 030208	VPM2,5x6	T08
WCV 20025-3D	20	25	63	78	WC.. 030208	VPM2,5x6	T08
WCV 20525-3D	20,5	25	65	80	WC.. 030208	VPM2,5x6	T08
WCV 21025-3D	21	25	66	81	WC.. 040208	VPM2,5x6	T08
WCV 21525-3D	21,5	25	68	83	WC.. 040208	VPM2,5x6	T08
WCV 22025-3D	22	25	69	84	WC.. 040208	VPM2,5x6	T08
WCV 22525-3D	22,5	25	71	86	WC.. 040208	VPM2,5x6	T08
WCV 23025-3D	23	25	72	90	WC.. 040208	VPM2,5x6	T08
WCV 23525-3D	23,5	25	74	92	WC.. 040208	VPM2,5x6	T08
WCV 24025-3D	24	25	75	93	WC.. 040208	VPM2,5x6	T08
WCV 24525-3D	24,5	25	77	95	WC.. 040208	VPM2,5x6	T08
WCV 25025-3D	25	25	78	96	WC.. 050308	VPM3x8	T08
WCV 25532-3D	25,5	32	80	100	WC.. 050308	VPM3x8	T08
WCV 26032-3D	26	32	81	101	WC.. 050308	VPM3x8	T08
WCV 26532-3D	26,5	32	83	103	WC.. 050308	VPM3x8	T08
WCV 27032-3D	27	32	84	104	WC.. 050308	VPM3x8	T08
WCV 27532-3D	27,5	32	86	106	WC.. 050308	VPM3x8	T08
WCV 28032-3D	28	32	87	107	WC.. 050308	VPM3x8	T08
WCV 28532-3D	28,5	32	89	109	WC.. 050308	VPM3x8	T08
WCV 29032-3D	29	32	91	112	WC.. 050308	VPM3x8	T08
WCV 29532-3D	29,5	32	93	114	WC.. 050308	VPM3x8	T08

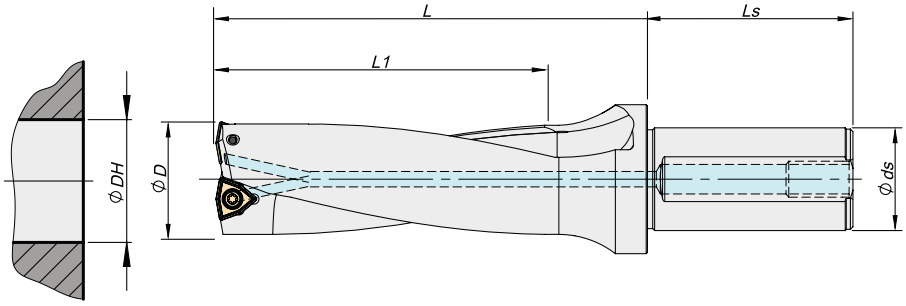

ØDH TOLLERANZA - *Tollerance* (mm)	
Ø D	3D
13 - 21,5	-0,10 / +0,15
22 - 50	-0,12 / +0,20
50 - 58	-0,15 / +0,25

Ø ds	Ls	BP/SP
20	44	PT-1/8
25	56	PT-1/8
32	60	PT-1/4
40	70	PT-1/4

ATTACCO CON PIATTO PARALLELO - Flat Shank					INSERTO Insert	VITE Screw	TORX Key
CODICE / Code	Ø D	Ø ds	L1	L			
WCV 30032-3D	30	32	94	118	WC.. 050308	VPM3x8	T08
WCV 30532-3D	30,5	32	96	120	WC.. 050308	VPM3x8	T08
WCV 31032-3D	31	32	97	121	WC.. 06T308	VPM3,5x8	T15
WCV 31532-3D	31,5	32	99	123	WC.. 06T308	VPM3,5x8	T15
WCV 32032-3D	32	32	100	124	WC.. 06T308	VPM3,5x8	T15
WCV 32532-3D	32,5	32	102	126	WC.. 06T308	VPM3,5x8	T15
WCV 33032-3D	33	32	103	127	WC.. 06T308	VPM3,5x8	T15
WCV 33532-3D	33,5	32	105	129	WC.. 06T308	VPM3,5x8	T15
WCV 34032-3D	34	32	104	130	WC.. 06T308	VPM3,5x8	T15
WCV 34532-3D	34,5	32	108	132	WC.. 06T308	VPM3,5x8	T15
WCV 35032-3D	35	32	109	133	WC.. 06T308	VPM3,5x8	T15
WCV 36032-3D	36	32	112	136	WC.. 06T308	VPM3,5x8	T15
WCV 37032-3D	37	32	116	146	WC.. 06T308	VPM3,5x8	T15
WCV 38032-3D	38	32	119	149	WC.. 06T308	VPM3,5x8	T15
WCV 39032-3D	39	32	122	152	WC.. 06T308	VPM3,5x8	T15
WCV 40040-3D	40	40	125	155	WC.. 06T308	VPM3,5x8	T15
WCV 41040-3D	41	40	128	158	WC.. 06T308	VPM3,5x8	T15
WCV 42040-3D	42	40	131	161	WC.. 080412	VPM4x10	T15
WCV 43040-3D	43	40	134	164	WC.. 080412	VPM4x10	T15
WCV 44040-3D	44	40	137	167	WC.. 080412	VPM4x10	T15
WCV 45040-3D	45	40	140	170	WC.. 080412	VPM4x10	T15
WCV 46040-3D	46	40	143	173	WC.. 080412	VPM4x10	T15
WCV 47040-3D	47	40	146	176	WC.. 080412	VPM4x10	T15
WCV 48040-3D	48	40	149	179	WC.. 080412	VPM4x10	T15
WCV 49040-3D	49	40	152	182	WC.. 080412	VPM4x10	T15
WCV 50040-3D	50	40	155	185	WC.. 080412	VPM4x10	T15

Da Ø51 a Ø60 e misure intermedie, ordinabili solo su richiesta
From Ø51 to Ø60 and middle, can be ordered only on request

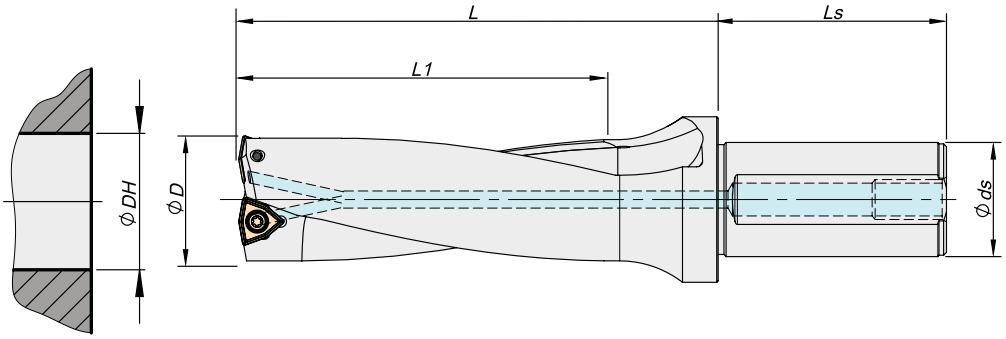

ØDH TOLLERANZA - *Tollerance* (mm)	
Ø D	5D
13 - 21,5	-0,10 / +0,15
22 - 50	-0,12 / +0,20
50 - 58	-0,15 / +0,25

Ø ds	Ls	BP/SP
20	44	PT-1/8
25	56	PT-1/8
32	60	PT-1/4
40	70	PT-1/4

ATTACCO CON PIATTO PARALLELO - Flat Shank					INSERTO Insert	VITE Screw	TORX Key
CODICE / Code	Ø D	Ø ds	L1	L			
WCV 16020-5D	16	20	83	98	WC.. 030208	VPM2,5x6	T08
WCV 17020-5D	17	20	88	101	WC.. 030208	VPM2,5x6	T08
WCV 18025-5D	18	25	93	108	WC.. 030208	VPM2,5x6	T08
WCV 19025-5D	19	25	98	113	WC.. 030208	VPM2,5x6	T08
WCV 20025-5D	20	25	103	118	WC.. 030208	VPM2,5x6	T08
WCV 21025-5D	21	25	108	123	WC.. 040208	VPM2,5x6	T08
WCV 22025-5D	22	25	113	128	WC.. 040208	VPM2,5x6	T08
WCV 23025-5D	23	25	118	136	WC.. 040208	VPM2,5x6	T08
WCV 24025-5D	24	25	123	141	WC.. 040208	VPM2,5x6	T08
WCV 25025-5D	25	25	128	146	WC.. 050308	VPM3x8	T08
WCV 26032-5D	26	32	131	156	WC.. 050308	VPM3x8	T08
WCV 27032-5D	27	32	138	158	WC.. 050308	VPM3x8	T08
WCV 28032-5D	28	32	143	163	WC.. 050308	VPM3x8	T08
WCV 29032-5D	29	32	149	170	WC.. 050308	VPM3x8	T08
WCV 30032-5D	30	32	154	178	WC.. 050308	VPM3x8	T08
WCV 31032-5D	31	32	159	183	WC.. 06T308	VPM3,5x8	T15
WCV 32032-5D	32	32	164	188	WC.. 06T308	VPM3,5x8	T15
WCV 33032-5D	33	32	169	193	WC.. 06T308	VPM3,5x8	T15
WCV 34032-5D	34	32	174	198	WC.. 06T308	VPM3,5x8	T15
WCV 35032-5D	35	32	179	203	WC.. 06T308	VPM3,5x8	T15

Da Ø36 a Ø60 e misure intermedie, ordinabili solo su richiesta
From Ø36 to Ø60 and middle, can be ordered only on request

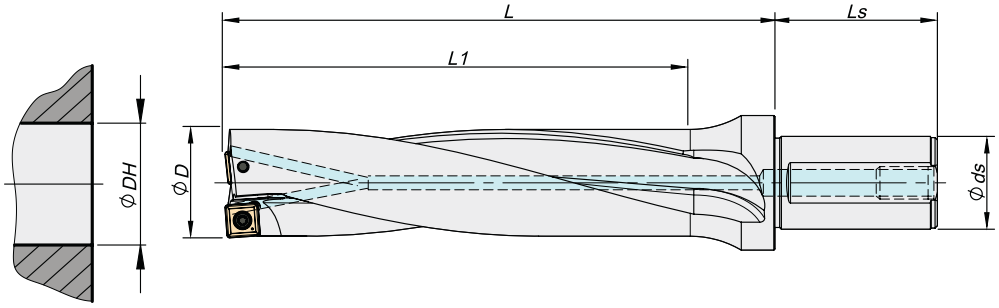

ØDH TOLLERANZA - *Tollerance* (mm)	
Ø DH	2D
13 - 40	+/- 0,2

Ø ds	Ls	BP / SP
20	44	PT-1/8
25	56	PT-1/8
32	60	PT-1/8

ATTACCO CON PIATTO PARALLELO - Flat Shank					INSERTO Insert	VITE Screw	TORX Key
CODICE / Code	Ø D	Ø ds	L1	L			
SPV 13020-2D	13	20	29	44	SP.. 050204	VPM2x4	T06
SPV 14020-2D	14	20	31	46	SP.. 050204	VPM2x4	T06
SPV 15020-2D	15	20	33	48	SP.. 050204	VPM2x4	T06
SPV 16020-2D	16	20	35	50	SP.. 060204	VPM2,2x5	T07
SPV 17020-2D	17	20	37	52	SP.. 060204	VPM2,2x5	T07
SPV 18025-2D	18	25	39	54	SP.. 060204	VPM2,2x5	T07
SPV 19025-2D	19	25	41	56	SP.. 060204	VPM2,2x5	T07
SPV 20025-2D	20	25	43	58	SP.. 060204	VPM2,2x5	T07
SPV 21025-2D	21	25	45	60	SP.. 060204	VPM2,2x5	T07
SPV 22025-2D	22	25	47	62	SP.. 07T308	VPM2,5x6	T08
SPV 23025-2D	23	25	49	67	SP.. 07T308	VPM2,5x6	T08
SPV 24025-2D	24	25	51	69	SP.. 07T308	VPM2,5x6	T08
SPV 25025-2D	25	25	53	71	SP.. 07T308	VPM2,5x6	T08
SPV 26032-2D	26	32	55	75	SP.. 07T308	VPM2,5x6	T08
SPV 27032-2D	27	32	57	77	SP.. 07T308	VPM2,5x6	T08
SPV 28032-2D	28	32	59	79	SP.. 07T308	VPM2,5x6	T08
SPV 29032-2D	29	32	62	83	SP.. 090408	VPM 3,5x8	T15
SPV 30032-2D	30	32	64	88	SP.. 090408	VPM 3,5x8	T15
SPV 31032-2D	31	32	66	90	SP.. 090408	VPM 3,5x8	T15
SPV 32032-2D	32	32	68	92	SP.. 090408	VPM 3,5x8	T15
SPV 33032-2D	33	32	70	94	SP.. 090408	VPM 3,5x8	T15
SPV 34032-2D	34	32	72	96	SP.. 090408	VPM 3,5x8	T15
SPV 35032-2D	35	32	74	98	SP.. 110408	VPM4x10	T15
SPV 36032-2D	36	32	76	100	SP.. 110408	VPM4x10	T15
SPV 37032-2D	37	32	79	109	SP.. 110408	VPM4x10	T15
SPV 38032-2D	38	32	81	111	SP.. 110408	VPM4x10	T15
SPV 39032-2D	39	32	83	113	SP.. 110408	VPM4x10	T15
SPV 40040-2D	40	40	85	115	SP.. 110408	VPM4x10	T15

Da Ø41 a Ø60 e misure intermedie, ordinabili solo su richiesta
From Ø41 to Ø60 and middle, can be ordered only on request

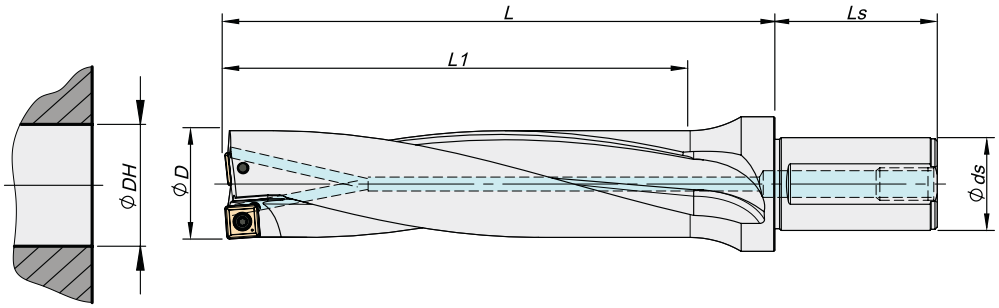

ØDH TOLLERANZA - *Tollerance* (mm)	
Ø DH	3D
13 - 40	+/- 0,2

Ø ds	Ls	BP / SP
20	44	PT-1/8
25	56	PT-1/8
32	60	PT-1/8

ATTACCO CON PIATTO PARALLELO - Flat Shank					INSERTO Insert	VITE Screw	TORX Key
CODICE / Code	Ø D	Ø ds	L1	L			
SPV 13020-3D	13	20	42	57	SP.. 050204	VPM2x4	T06
SPV 14020-3D	14	20	45	60	SP.. 050204	VPM2x4	T06
SPV 15020-3D	15	20	48	63	SP.. 050204	VPM2x4	T06
SPV 16020-3D	16	20	51	66	SP.. 060204	VPM2,2x5	T07
SPV 17020-3D	17	20	54	69	SP.. 060204	VPM2,2x5	T07
SPV 18025-3D	18	25	57	72	SP.. 060204	VPM2,2x5	T07
SPV 19025-3D	19	25	60	75	SP.. 060204	VPM2,2x5	T07
SPV 20025-3D	20	25	63	79	SP.. 060204	VPM2,2x5	T07
SPV 21025-3D	21	25	66	81	SP.. 060204	VPM2,2x5	T07
SPV 22025-3D	22	25	69	84	SP.. 07T308	VPM2,5x6	T08
SPV 23025-3D	23	25	72	90	SP.. 07T308	VPM2,5x6	T08
SPV 24025-3D	24	25	75	93	SP.. 07T308	VPM2,5x6	T08
SPV 25025-3D	25	25	78	96	SP.. 07T308	VPM2,5x6	T08
SPV 26032-3D	26	32	81	101	SP.. 07T308	VPM2,5x6	T08
SPV 27032-3D	27	32	84	104	SP.. 07T308	VPM2,5x6	T08
SPV 28032-3D	28	32	87	107	SP.. 07T308	VPM2,5x6	T08
SPV 29032-3D	29	32	91	112	SP.. 090408	VPM3,5x8	T15
SPV 30032-3D	30	32	94	118	SP.. 090408	VPM3,5x8	T15
SPV 31032-3D	31	32	97	121	SP.. 090408	VPM3,5x8	T15
SPV 32032-3D	32	32	100	124	SP.. 090408	VPM3,5x8	T15
SPV 33032-3D	33	32	103	127	SP.. 090408	VPM3,5x8	T15
SPV 34032-3D	34	32	106	130	SP.. 090408	VPM3,5x8	T15
SPV 35032-3D	35	32	109	133	SP.. 110408	VPM4x10	T15
SPV 36032-3D	36	32	112	136	SP.. 110408	VPM4x10	T15
SPV 37032-3D	37	32	116	146	SP.. 110408	VPM4x10	T15
SPV 38032-3D	38	32	119	147	SP.. 110408	VPM4x10	T15
SPV 39032-3D	39	32	122	152	SP.. 110408	VPM4x10	T15
SPV 40040-3D	40	40	125	155	SP.. 110408	VPM4x10	T15

Da Ø41 a Ø60 e misure intermedie, ordinabili solo su richiesta
From Ø41 to Ø60 and middle, can be ordered only on request

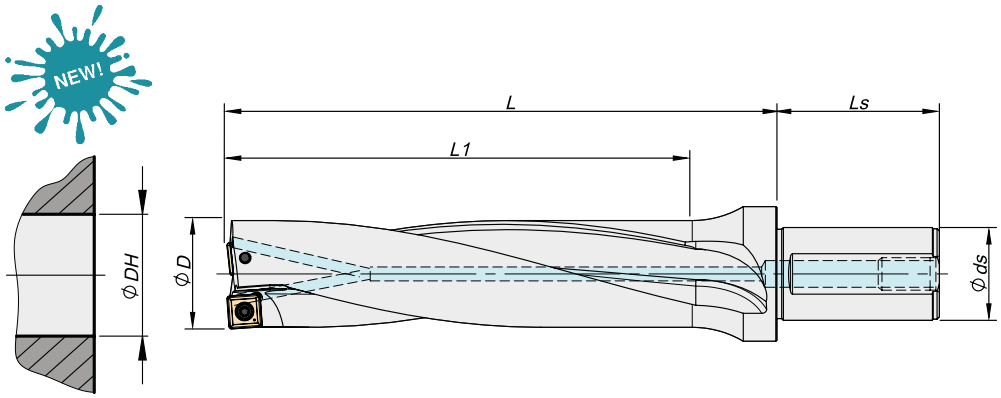

ØDH TOLLERANZA - *Tollerance* (mm)	
Ø DH	2D
13 - 40	+/- 0,2

Ø ds	Ls	BP / SP
20	44	PT-1/8
25	56	PT-1/8
32	60	PT-1/8

ATTACCO CON PIATTO PARALLELO - Flat Shank					INSERTO Insert	VITE Screw	TORX Key
CODICE / Code	Ø D	Ø ds	L1	L			
SOV 13020-2D	13	20	29	44	SO.. 050204	VPM2x4	T06
SOV 14020-2D	14	20	31	46	SO.. 050204	VPM2x4	T06
SOV 15020-2D	15	20	33	48	SO.. 050204	VPM2x4	T06
SOV 16020-2D	16	20	35	50	SO.. 050204	VPM2x4	T06
SOV 17020-2D	17	20	37	52	SO.. 060204	VPM2,2x5	T07
SOV 18025-2D	18	25	39	54	SO.. 060204	VPM2,2x5	T07
SOV 19025-2D	19	25	41	56	SO.. 060204	VPM2,2x5	T07
SOV 20025-2D	20	25	43	58	SO.. 060204	VPM2,2x5	T07
SOV 21025-2D	21	25	45	60	SO.. 070306	VPM2,2x5	T07
SOV 22025-2D	22	25	47	62	SO.. 070306	VPM2,2x5	T07
SOV 23025-2D	23	25	49	67	SO.. 08T306	VPM2,5x6	T08
SOV 24025-2D	24	25	51	69	SO.. 08T306	VPM2,5x6	T08
SOV 25025-2D	25	25	53	71	SO.. 08T306	VPM2,5x6	T08
SOV 26032-2D	26	32	55	75	SO.. 08T306	VPM2,5x6	T08
SOV 27032-2D	27	32	57	77	SO.. 09T308	VPM 3,5x8	T15
SOV 28032-2D	28	32	59	79	SO.. 09T308	VPM 3,5x8	T15
SOV 29032-2D	29	32	62	83	SO.. 09T308	VPM 3,5x8	T15
SOV 30032-2D	30	32	64	88	SO.. 09T308	VPM 3,5x8	T15
SOV 31032-2D	31	32	66	90	SO.. 09T308	VPM 3,5x8	T15
SOV 32032-2D	32	32	68	92	SO.. 11T308	VPM 3,5x8	T15
SOV 33032-2D	33	32	70	94	SO.. 11T308	VPM 3,5x8	T15
SOV 34032-2D	34	32	72	96	SO.. 11T308	VPM 3,5x8	T15
SOV 35032-2D	35	32	74	98	SO.. 11T308	VPM 3,5x8	T15

Da Ø36 a Ø50 e misure intermedie, ordinabili solo su richiesta
From Ø36 to Ø50 and middle, can be ordered only on request

NEW!

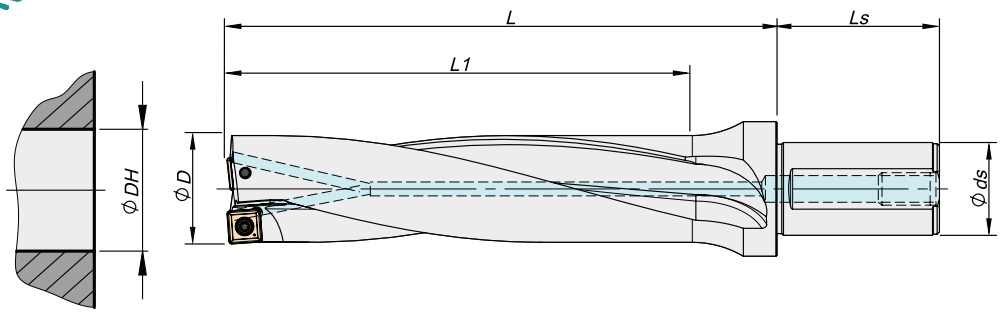

ØDH TOLLERANZA - *Tollerance* (mm)	
Ø DH	3D
13 - 40	+/- 0,2

Ø ds	Ls	BP / SP
20	44	PT-1/8
25	56	PT-1/8
32	60	PT-1/8

ATTACCO CON PIATTO PARALLELO - Flat Shank					INSERTO Insert	VITE Screw	TORX Key
CODICE / Code	Ø D	Ø ds	L1	L			
SOV 13020-3D	13	20	42	57	SO.. 050204	VPM2x4	T06
SOV 14020-3D	14	20	45	60	SO.. 050204	VPM2x4	T06
SOV 15020-3D	15	20	48	63	SO.. 050204	VPM2x4	T06
SOV 16020-3D	16	20	51	66	SO.. 050204	VPM2x4	T06
SOV 17020-3D	17	20	54	69	SO.. 060204	VPM2,2x5	T07
SOV 18025-3D	18	25	57	72	SO.. 060204	VPM2,2x5	T07
SOV 19025-3D	19	25	60	75	SO.. 060204	VPM2,2x5	T07
SOV 20025-3D	20	25	63	79	SO.. 060204	VPM2,2x5	T07
SOV 21025-3D	21	25	66	81	SO.. 070306	VPM2,2x5	T07
SOV 22025-3D	22	25	69	84	SO.. 070306	VPM2,2x5	T07
SOV 23025-3D	23	25	72	90	SO.. 08T306	VPM2,5x6	T08
SOV 24025-3D	24	25	75	93	SO.. 08T306	VPM2,5x6	T08
SOV 25025-3D	25	25	78	96	SO.. 08T306	VPM2,5x6	T08
SOV 26032-3D	26	32	81	101	SO.. 08T306	VPM2,5x6	T08
SOV 27032-3D	27	32	84	104	SO.. 09T308	VPM3,5x8	T15
SOV 28032-3D	28	32	87	107	SO.. 09T308	VPM3,5x8	T15
SOV 29032-3D	29	32	91	112	SO.. 09T308	VPM3,5x8	T15
SOV 30032-3D	30	32	94	118	SO.. 09T308	VPM3,5x8	T15
SOV 31032-3D	31	32	97	121	SO.. 09T308	VPM3,5x8	T15
SOV 32032-3D	32	32	100	124	SO.. 11T308	VPM3,5x8	T15
SOV 33032-3D	33	32	103	127	SO.. 11T308	VPM3,5x8	T15
SOV 34032-3D	34	32	106	130	SO.. 11T308	VPM3,5x8	T15
SOV 35032-3D	35	32	109	133	SO.. 11T308	VPM3,5x8	T15

Da Ø36 a Ø50 e misure intermedie, ordinabili solo su richiesta
From Ø36 to Ø50 and middle, can be ordered only on request

PUNTA MODULARE 6/8xD
Modular Drill

ATTACCO CON PIATTO PARALLELO - Flat Shank

PUNTA COMPLETA *Unibody*	Ø PILOTA *Pilot*	PROF. TAGLIO *Cut Length* 6 x Ø	PROF. TAGLIO *Cut Length* 8 x Ø	Ø ATTACCO *Shank*	COD. CORPO *Drill Body Code*	COD. TESTINA *Head Code*	Ø TESTINA *Ø Head*	INSERTI *Inserts*	Nr. Z
WCV 4044-6D/8D	10	260	360	40	WCH40-6D/8D	WC40	40	WCMX 06..	2
						WC41	41	WCMX 06..	2
						WC42	42	WCMX 06..	2
						WC43	43	WCMX 06..	2
						WC44	44	WCMX 06..	2
WCV 4549-6D/8D	10	290	410	40	WCH45-6D/8D	WC45	45	WCMX 06..	2
						WC46	46	WCMX 06..	2
						WC47	47	WCMX 06..	2
						WC48	48	WCMX 06..	2
						WC49	49	WCMX 06..	2
WCV 5055-6D/8D	12	330	440	40	WCH50-6D/8D	WC50	50	WCMX 08..	2
						WC51	51	WCMX 08..	2
						WC52	52	WCMX 08..	2
						WC53	53	WCMX 08..	2
						WC54	54	WCMX 08..	2
						WC55	55	WCMX 08..	2
WCV 5660-6D/8D	12	360	480	40	WCH56-6D/8D	WC56	56	WCMX 08..	2
						WC57	57	WCMX 08..	2
						WC58	58	WCMX 08..	2
						WC59	59	WCMX 08..	2
						WC60	60	WCMX 08..	2
WCV 6165-6D/8D	12	390	520	40	WCH61-6D/8D	WC61	61	WCMX 08..	2
						WC62	62	WCMX 08..	2
						WC63	63	WCMX 08..	2
						WC64	64	WCMX 08..	2
						WC65	65	WCMX 08..	2
WCV 6670-6D/8D	12	420	560	40	WCH66-6D/8D	WC66	66	WCMX 08..	2
						WC67	67	WCMX 08..	2
						WC68	68	WCMX 08..	2
						WC69	69	WCMX 08..	2
						WC70	70	WCMX 08..	4
WCV 7180-6D/8D	12	480	640	40	WCH71-6D/8D	WC71	71	WCMX 06..	4
						WC72	72	WCMX 06..	4
						WC73	73	WCMX 06..	4
						WC74	74	WCMX 06..	4
						WC75	75	WCMX 06..	4
						WC76	76	WCMX 06..	4
						WC77	77	WCMX 06..	4
						WC78	78	WCMX 06..	4
						WC79	79	WCMX 06..	4
						WC80	80	WCMX 06..	4

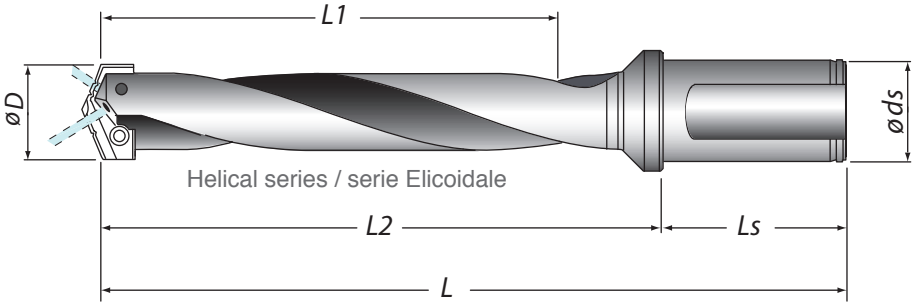

ATTACCO CON PIATTO PARALLELO - Flat Shank

CODICE / Code	Ø D *da / a (from / to)*	Ø ds	L1	L2	L	LS	INSERTO *Insert Type*	SCARICO *Flute Type*
V130 - 175 - U63 - W20	13 - 17,5	20	63,5	92	142	50	**HSS M48..** Da Ø 13 a Ø 17,5 *From Ø 13 To Ø 17,5*	Elicoidale / *Helical*
V130 - 175 - U114 - W20	13 - 17,5	20	114,3	143	193	50		Elicoidale / *Helical*
V130 - 175 - U177 - W20	13 - 17,5	20	177,8	206	256	50		Elicoidale / *Helical*
V130 - 175 - U295D - W20	13 - 17,5	20	295	324	374	50		Dritto / *Straight*
V130 - 175 - U387D - W20	13 - 17,5	20	387	416	466	50		Dritto / *Straight*
V155 - 175 - U63 - W20	15,5 - 17,5	20	63,5	92	142	50	**HSS M48..** Da Ø 15,5 a Ø 17,5 *From Ø 15,5 To Ø 17,5*	Elicoidale / *Helical*
V155 - 175 - U114 - W20	15,5 - 17,5	20	114,3	143	193	50		Elicoidale / *Helical*
V155 - 175 - U177 - W20	15,5 - 17,5	20	177,8	206	256	50		Elicoidale / *Helical*
V180 - 240 - U117 - W25	18 - 24	25	117,5	155	210	56	**HSS M48..** Da Ø 18 a Ø 24 *From Ø 18 To Ø 24*	Elicoidale / *Helical*
V180 - 240 - U168 - W25	18 - 24	25	168,3	205	260	56		Elicoidale / *Helical*
V180 - 240 - U269 - W25	18 - 24	25	269,9	307	363	56		Elicoidale / *Helical*
V180 - 240 - U457D - W25	18 - 24	25	457	495	550	56		Dritto / *Straight*
V180 - 240 - U569D - W25	18 - 24	25	569	603	660	56		Dritto / *Straight*
V250 - 350 - U136 - W32	25 - 35	32	136,5	180	240	60	**HSS M48..** Da Ø 25 a Ø 35 *From Ø 25 To Ø 35*	Elicoidale / *Helical*
V250 - 350 - U187 - W32	25 - 35	32	187,3	230	290	60		Elicoidale / *Helical*
V250 - 350 - U288 - W32	25 - 35	32	288,9	332	392	60		Elicoidale / *Helical*
V250 - 350 - U511D - W32	25 - 35	32	511	554	615	60		Dritto / *Straight*
V250 - 350 - U692D - W32	25 - 35	32	692	735	796	60		Dritto / *Straight*
V360 - 470 - U165- W40	36 - 47	40	165,1	218	289	70	**HSS M48..** Da Ø 36 a Ø 47 *From Ø 36 To Ø 47*	Elicoidale / *Helical*
V360 - 470 - U209- W40	36 - 47	40	209,6	262	332	70		Elicoidale / *Helical*

Ordinabili su richiesta
ordered on request

Inserti intercambiabili con / *Interchangeable inserts with:*
AMEC / YG1 / ARNO

SISTEMA IDENTIFICATIVO ISO PER INSERTI FRESATURA
Milling Inserts ISO Identification System

H	120°	M	86°
O	135°	V	35°
P	108°	W	80°
S	90°	L	90°
T	60°	A	85°
C	80°	B	82°
D	55°	K	55°
E	75°	R	
F	50°	X	Special Geometries

Symbol for insert shape

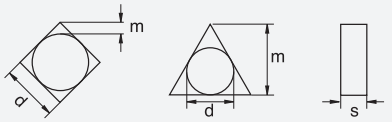

Triangular insert with a facet (secondary cutting edge).

Symbol	m (mm)	d (mm)	s (mm)
A	±0.005	±0.025	±0.025
F	±0.005	±0.013	±0.025
C	±0.013	±0.025	±0.025
H	±0.013	±0.013	±0.025
E	±0.025	±0.025	±0.025
G	±0.025	±0.025	±0.13
J	±0.005	±0.05~±0.13	±0.025
K*	±0.013	±0.05~±0.13	±0.025
L*	±0.025	±0.05~±0.13	±0.025
M*	±0.08~±0.18	±0.05~±0.13	±0.13
N*	±0.08~±0.18	±0.05~±0.13	±0.025
U*	±0.13~±0.38	±0.08~±0.25	±0.13

* As a rule, the sides of these inserts are as sintered. Tolerance differs with insert size, for the accuracy of Class M, refer to the table on the right.

Detailed dimension of M class insert
Tolerances of insert height (mm)

Inscribed circle	T	S	C	D	V
6.35	±0.08	-	-	-	-
9.525	±0.08	±0.08	±0.08	±0.11	±0.13
12.70	±0.13	±0.13	±0.13	±0.15	-
15.875	±0.15	±0.15	±0.15	±0.18	-
19.05	±0.15	±0.15	±0.15	±0.18	-
25.40	-	±0.18	-	-	-
31.75	-	±0.25	-	-	-

Tolerances of inscribed circle (mm)

Inscribed circle	T	S	C	D	V	R
6.35	±0.05	-	-	-	-	-
9.525	±0.05	±0.05	±0.05	±0.05	±0.05	±0.05
12.70	±0.08	±0.08	±0.08	±0.08	-	±0.08
15.875	±0.10	±0.10	±0.10	±0.10	-	±0.10
19.05	-	-	-	-	-	±0.10
25.40	-	±0.13	-	-	-	±0.10
31.75	-	±0.20	-	-	-	±0.12

Symbol for tolerances

A	B	C	D	E
3°	5°	7°	15°	20°
F	G	N	P	O
25°	30°	0	11°	Other clearance angle

Symbol for normal Clearance

ISO **A P K T**

Type of chipbreaker and/or clamping

Metrical

Symbol	Type	Type of hole	Chipbreaker	Shape	Symbol	Type	Type of hole	Chipbreaker	Shape	Symbol	Type	Type of hole	Chipbreaker	Shape
W	With Hole	Round hole / one countersink (40°~60°)	Without chipbreaker		H	With Hole	Round hole / double countersink (70°~90°)	Chipbreaker on one side		G	With Hole	Round hole	Chipbreaker on both sides	
T	With Hole		Chipbreaker on one side		C	With Hole	Round hole / double countersink (70°~90°)	Without chipbreaker		N	With-out Hole	-	Without chipbreaker	
Q	With Hole	Round hole / double countersink (40°~60°)	Without chipbreaker		J	With Hole		Chipbreaker on both sides		R	With-out Hole	-	Chipbreaker on one side	
U	With Hole		Chipbreaker on both sides		A	With Hole	Round hole	Without chipbreaker		F	With-out Hole	-	Chipbreaker on both sides	
B	With Hole	Round hole / double countersink (70°~90°)	Without chipbreaker		M	With Hole	Round hole	Chipbreaker on one side		X	-	-	-	On request

SISTEMA IDENTIFICATIVO ISO PER INSERTI FRESATURA

Milling Inserts ISO Identification System

R's	V's (35°)	D's (55°)	C's (80°)	S's (90°)	T's (60°)	W's (80°)	Ø CI mm	Ø CI inch	ANSI Symbol
-	06	04	-	03	06	02	3,97	5/32	1,20
-	08	05	04	04	08	L3	4,76	3/16	1,50
-	09	06	05	05	09	03	5,56	7/32	1,80
06**	-	-	-	-	-	-	6,00	0,236	
06*	11	07	06	06	11	04	6,35	1/4	2,00
07*	13	09	08	07	13	05	7,95	5/16	2,50
08*	-	-	-	-	-	-	8,00	0,315	
09*	16	11	09	09	16	06	9,525	3/8	3,00
10**	-	-	-	-	-	-	10,00	0,394	
12**	-	-	-	-	-	-	12,00	0,472	
12*	22	15	12	12	22	08	12,70	1/2	4,00
15*	27	19	16	15	27	10	15,875	5/8	5,00
16**	-	-	-	-	-	-	16,00	0,63	
19*	33	23	19	19	33	13	19,05	3/4	6,00
20**	-	-	-	-	-	-	20,00	0,787	
25**	-	-	-	-	-	-	25,00	0,984	
25*	44	31	25	25	44	17	25,40	1,00	8,00
31*	54	38	32	31	54	21	31,75	1 1/4	10,00
32**	-	-	-	-	-	-	32,00	1,26	

Symbol for insert size

* ANSI designation only (Radius Designation is 00)
** Metric designation only (Radius Designation is M0)
According to International Standard ISO 1832 - - 2004 "Indexable inserts for cutting tools - Designation"

* Designazione ANSI Raggio = 00
** Designazione Metrica Raggio = MO

ISO	mm	ANSI	inch
01	1.59	1	0.062
T1	1.98	1.2	0.078
02	2.38	1.5	0.094
03	3.18	2	0.125
T3	3.97	2.5	0.156
04	4.76	3	0.188
05	5.56	3.5	0.219
06	6.35	4	0.250
07	7.94	5	0.312
09	9.52	6	0.375
12	12.70	8	0.500

symbol for insert thikness

16 04 08 PD T R

Symbol for insert corner configuration

ISO	mm	inch	ANSI
00	Sharp nose		0
02	0.20	.008	0.5
04	0.40	.015	1
08	0.80	.032	2
12	1.2	.047	3
16	1.6	.062	4
20	2.0	.078	5
24	2.4	.094	6
28	2.□78	.109	7
32	3.18	.125	8
	Round insert		0

Symbol for insert with secondary edges

For inserts having secondary edges two digits are user:

1st Digit is secondary edge		2nd Digit is secondary relief angle	
A	45°	A	3°
D	60°	B	5°
E	75°	C	7°
F	85°	D	15°
P	90°	E	20°
Z	special	F	25°
		G	30°
		N	0°
		P	11°

Cutting Edge condition

Shape	Honing	Symbol
	No honing	F
	With honing	E
	Chamfred no honing	T
	Chamfred with honing	S

* We use handing symbols (R.L.) only, omitting honing symbols

Direction of cutting

Shape	Hand	Symbol
•5	Right	R
•/	Left	L
•1	None	N

● = ARTICOLI IN STOCK - *STOCK ITEMS* / ● = DISPONIBILE SU RICHIESTA - *AVAILABLE UNDER REQUEST*

GRADI / *Grades*

	P							M			K									N		S		H						
ISO CODICE / *Code*	VHP103	VHP910	VHP920	VHP930	LT30	VHP125	VP2430	VHP920	VHP930	LT30	VHP910	VHP920	VHP930	LT30	VHP705	VHP325	VHC705	VHC740	VHX910	VHPCD	VHX910	VHP920	LT30	VHP103	VHCBN	*IC*	*S*	*L*	*R*	*F*
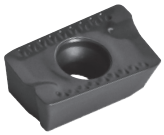																										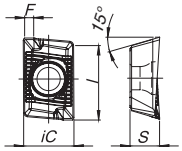				
ADKT 150508 PDR												●														9,54	5,63	15,7	0,8	1,6
ADKT 150508 PDSR			●									●														9,54	5,63	15,7	0,8	1,6
ADKT 150508 PDTR			●					●				●														9,54	5,63	15,7	0,8	1,6
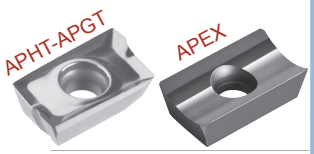																										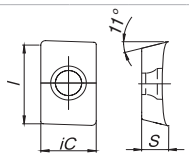				
APEX 1003 PD FR VA																					●					6,70	3,18	10,3	0,4	-
APHT 1003 - Alu																					●					6,70	3,18	10,3	0,2	-
APEX 1604 PD FR VA																					●					9,52	4,76	16,4	0,4	-
APEX 1604 PD FL VA																					●					9,52	4,76	16,4	0,4	-
APHT 1604 - Alu																					●					9,52	4,76	16,4	0,2	-
APGT 1604 PDFR - Alu																					●					9,52	4,76	16,4	0,8	-
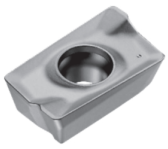																										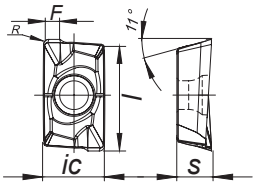				
APKT 100305 PDER-X1			●									●														6,70	3,2	10	0,5	1,2
APKT 100305 PDSR-X1			●									●														6,70	3,2	10	0,5	1,2
APKT 100308 PDER-X			●									●														6,70	3,2	10	0,8	0,9
APKT 100308 PDTR-X			●									●														6,70	3,2	10	0,8	0,9
APKT 100308 PDSR-X			●									●														6,70	3,2	10	0,8	0,9
APKT 160408 PDER-X1			●									●														9,52	4,76	16	0,8	1,76
APKT 160408 PDSR-X1			●									●														9,52	4,76	16	0,8	-
APKT 160408 PDTR				●					●				●													9,52	4,76	16	0,8	1,76
APKT 160416 PDSR-X			●									●														9,52	4,76	16	1,6	1,20
APKT 160432 PDSR-X			●									●														9,52	4,76	16	3,2	-
APKT 1604 V2							●																			9,52	4,76	16	-	1,2
APKT 1604 PDTR LT30					●					●				●									●			9,52	4,76	16	-	1,2
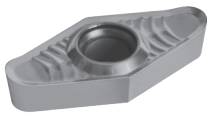																										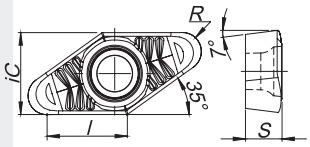				
VCGX 220530 LN																					●					12,7	5,6	12,7	3	-
VCGX 110302 LN																					●					6,35	3,18	6,35	0,2	-
VCGX 110304 LN																					●					6,35	3,18	6,35	0,4	-

● = ARTICOLI IN STOCK - *STOCK ITEMS* / ● = DISPONIBILE SU RICHIESTA - *AVAILABLE UNDER REQUEST*

GRADI / *Grades*

	P							M			K									N		S		H						
ISO CODICE / *Code*	VHP103	VHP910	VHP920	VHP930	LT30	VHP125	VP2430	VHP920	VHP930	LT30	VHP910	VHP920	VHP930	LT30	VHP705	VHP325	VHC705	VHC740	VHX910	VHPCD	VHX910	VHP920	LT30	VHP103	VHCBN	*IC*	*S*	*L*	*R*	*F*
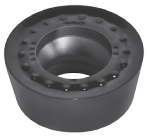																										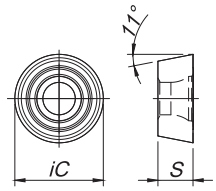				
RPMT 1204 MOS V2			●					●	●													●				12	4,76	-	-	-
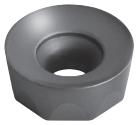																										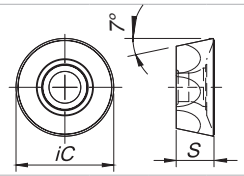				
RCKT 1204 MOE V2			●					●														●				12	4,76	-	-	-
RCKT 1606 MOS V2			●					●														●				16	6,35	-	-	-
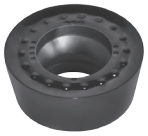																										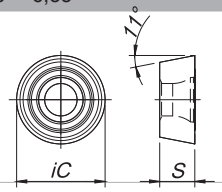				
RCMT 1204 MOE V4			●					●														●				12	4,76	-	-	-
RCMT 1606 MOE V4			●					●														●				16	6,35	-	-	-
RCMT 2006 MOE V4			●					●														●				20	6,35	-	-	-
RDHT MOF-Alu 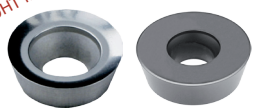																										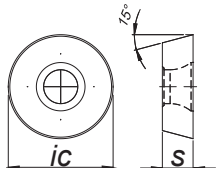				
RDHT 0702 MO F- Alu																					●					7,0	2,38	-	-	-
RDHW 0702 MO T			●					●														●				7,0	2,38	-	-	-
RDHW 1003 MO T			●					●														●				10	3,18	-	-	-
RDHT 1003 MO T			●					●														●				10	3,18	-	-	-
RDHT 1003 MOF-Alu																					●					10	3,18	-	-	-
RDMT 1003 MO			●					●				●										●				10	3,18	-	-	-
RDHW 12T3 MO T			●					●														●				12	3,97	-	-	-
RDHT 12T3 MO F- Alu																					●					12	3,97	-	-	-
RDMT 12T3 MO			●					●				●										●				12	3,97	-	-	-
RDMT 1204 MO			●					●				●										●				12	4,76	-	-	-
RDHT 1604 MO F- Alu																					●					16	4,76	-	-	-
RDHW 1604 MO T			●					●														●				16	4,76	-	-	-
RDMW 1604 MO T			●					●					●													16	4,76	-	-	-
																										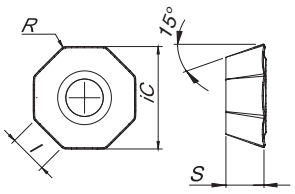				
ODMT 060508X E V2			●					●				●														15,8	5,56	6	0,8	-

● = ARTICOLI IN STOCK - *STOCK ITEMS* / ● = DISPONIBILE SU RICHIESTA - *AVAILABLE UNDER REQUEST*

GRADI / *Grades*

	P							M			K									N		S		H						
ISO CODICE / *Code*	VHP103	VHP910	VHP920	VHP930	LT30	VHP125	VP2430	VHP920	VHP930	LT30	VHP910	VHP920	VHP930	LT30	VHP705	VHP325	VHC705	VHC740	VHX910	VHPCD	VHX910	VHP920	LT30	VHP103	VHCBN	*IC*	*S*	*L*	*R*	*F*
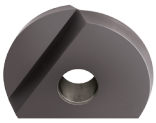																										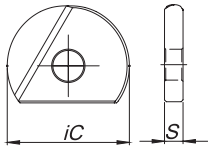				
AWR 10			●																							10	2,6	-	-	-
AWR 12			●																							12	3	-	-	-
AWR 16			●																							16	4	-	-	-
AWR 20			●																							20	5	-	-	-
AWR 25			●																							25	6	-	-	-
AWR 32			●																							32	7	-	-	-
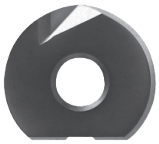																										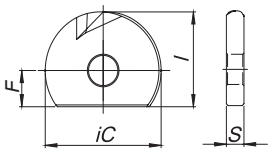				
WPR SN 08			●									●														8	2	9,5	-	4
WPR SN 10			●									●														10	2,5	9,5	-	5
WPR SN 12			●									●														12	2,5	11.9	-	6
WPR SN 16			●									●														16	3	13,9	-	6
WPR SN 20			●									●														20	3	15,9	-	6
WPR SN 25			●									●														25	4	21,5	-	9
WPR SN 32			●									●														32	5	25,9	-	10
																										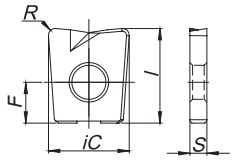				
WPB SN-S 1010			●									●														10	2,5	11,5	1,0	5
WPB SN-S 1210			●									●														12	2,5	13,9	1,0	6
WPB SF 1210																										12	2,5	13,9	1,0	6
WPB SN-S 1610			●									●														16	3	15,9	1,0	6
WPB SF 1610																										16	3	15,9	1,0	6
WPB SN-S 1613			●									●														16	3	15,9	1,3	6
WPB SN-S 2010			●									●														20	3	17,9	1,0	6
WPB SN-S 2016			●									●														20	3	17,9	1,6	6
WPB SN-S 2520			●									●														25	4	23,5	2,0	9
WPB SN-S 3225			●									●														32	5	25,9	2,5	10
																										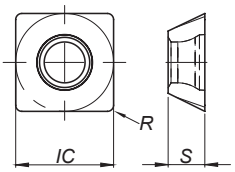				
SOMX 11T308			●					●				●														10,9	3,97	10,9	0,8	-

● = ARTICOLI IN STOCK - *STOCK ITEMS* / ● = DISPONIBILE SU RICHIESTA - *AVAILABLE UNDER REQUEST*

GRADI / *Grades*

	P							M			K									N		S		H						
ISO CODICE / *Code*	VHP103	VHP910	VHP920	VHP930	LT30	VHP125	VP2430	VHP920	VHP930	LT30	VHP910	VHP920	VHP930	LT30	VHP705	VHP325	VHC705	VHC740	VHX910	VHPCD	VHX910	VHP920	LT30	VHP103	VHCBN	*IC*	*S*	*L*	*R*	*F*
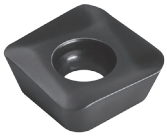																										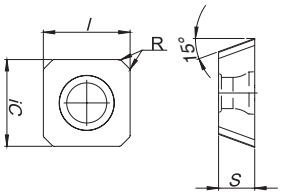				
SDHT 120408 E VE			●					●				●										●				12,7	4,76	12,7	0,8	-
SDKT 1204 AETN			●					●				●										●				12,7	4,76	12,7	-	2,3
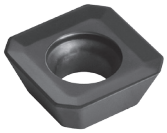																										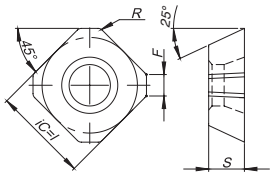				
SEHT 1204 AFTN			●					●				●														12,7	4,76	12,7	-	2,8
SEHT 1204 AF - Alu																					●					12,7	4,76	12,7	-	2,0
SEHW 1204 AFEN			●					●				●														12,7	4,76	12,7	-	2,8
SEHW 1204 AFTN			●					●				●														12,7	4,76	12,7	-	2,8
																										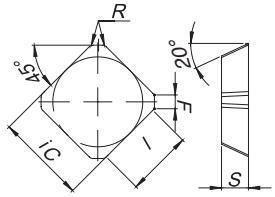				
SEHN 1203 AFTN			●									●														12,7	3,18	9,5	0,8	2,5
SEHN 1204 AFTN			●									●														12,7	4,76	9,5	0,8	2,5
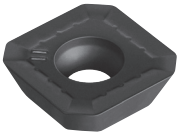																										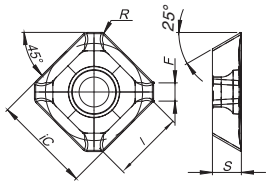				
SEHT 13T3 AGSN			●					●				●										●				13,3	3,97	10	-	2,0
SEHT 13T3 AGFN-LN																					●					13,3	3,97	10	-	2,3
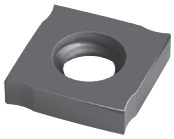																										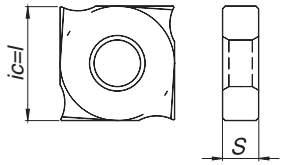				
SNHX 1202 XX TA			●					●				●														12,7	2,30	12,7	-	-
SNHX 1203 XX TA			●					●				●														12,7	3,18	12,7	-	-
SNHX 1204 XX TA			●					●				●														12,7	4,0	12,7	-	-
SNHX 12045 XX TA			●					●				●														12,7	4,50	12,7	-	-
SNHX 1205 XX TA			●					●				●														12,7	5,40	12,7	-	-

● = ARTICOLI IN STOCK - *STOCK ITEMS* / ● = DISPONIBILE SU RICHIESTA - *AVAILABLE UNDER REQUEST*

GRADI / *Grades*

	P							M			K									N		S		H						
ISO CODICE / *Code*	VHP103	VHP910	VHP920	VHP930	LT30	VHP125	VP2430	VHP920	VHP930	LT30	VHP910	VHP920	VHP930	LT30	VHP705	VHP325	VHC705	VHC740	VHX910	VHPCD	VHX910	VHP920	LT30	VHP103	VHCBN	*IC*	*S*	*L*	*R*	*F*
																										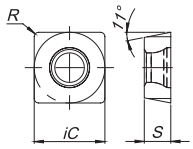				
SPMT 09T308			●					●				●														9,52	3,97	-	0,8	-
SPMT 120408-MP			●					●				●										●				12,7	4,76	-	0,8	-
SPMT 060304 TN LT30					●					●				●									●			6,35	3,18	-	0,4	-
																										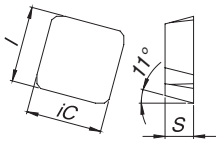				
SPKN 1203 EDTR			●									●														12,7	3,18	12,7	-	-
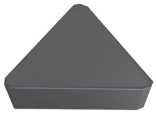																										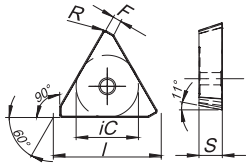				
TPKN 1603 PDER			●																							9,52	3,18	16,5	0,7	1,2
TPKN 1603 PDTR			●																							9,52	3,18	16,5	0,7	1,2
TPKN 2204 PDSR			●																							12,7	4,76	22	0,5	1,7
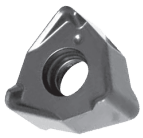																										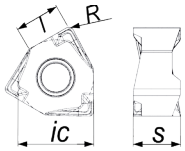				
XNEX 080608								●			●															12,5	6,47	7,5	0,8	-
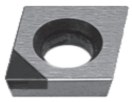																										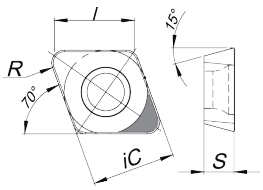				
XDHW 040110 FN																				●						4,0	2,38	4,0	1,0	-
XDHW 040110 TN																									●	4,0	2,38	4,0	1,0	-
XDHW 060210 FN																				●						6,5	2,38	6,2	1,0	-
XDHW 060210 TN																									●	6,5	2,38	6,2	1,0	-
XDHW 10T310 FN																				●						10	3,97	9,9	1,0	-
XDHW 10T310 TN																									●	10	3,97	9,9	1,0	-
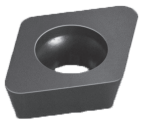																										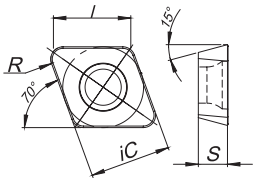				
XDHW 040110		●									●													●		4,0	2,38	4,0	1,0	-
XDHW 060210		●									●													●		6,5	2,38	6,2	1,0	-
XDHW 10T310		●									●													●		10	3,97	9,9	1,0	-

CODICE INSERTO *Insert code/type*	MATERIALE *Material*						DIMENSIONI *Dimensions*				STOCK *Available*	
	P	M	K	N	S	H	*IC*	*S*	*L*	*R*	●	●
							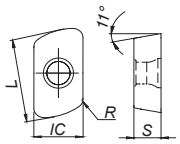					
EPNW 0603TN-8 JP4020 (30~55 HRC)	●		●			●	6,35	3,18	9,5	2	●	
EPMT 0603TN-8 JP4020 (30~55 HRC)	●	●	●			●	6,35	3,18	9,5	2	●	
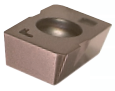							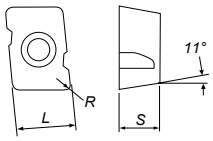					
MPHW 060304 ZEL ATH08M (< 30~60 HRC)	●	●	●				6,35	3,18	6,35	0,4	●	
MPHW 060308 ZEL ATH08M (< 30~60 HRC)	●	●	●				6,35	3,18	6,35	0,8	●	
MPHW 060320 ZEL ATH08M (< 30~60 HRC)	●	●	●				6,35	3,18	6,35	2	●	
							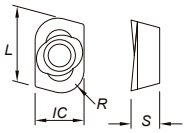					
EDMT 070220R-T JP4020 (< 30~50 HRC)	●	●	●	●			4,3	2,5	6,4	2	●	
							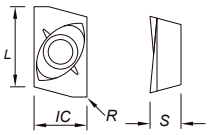					
JDMT 070208R JP4020 (< 30~50 HRC)	●	●	●	●			4,3	2,45	6,4	0,8	●	
							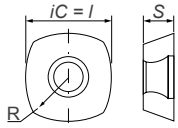					
SDMT 1205 ZDTN-R15 JP4020	●		●				12,7	5,56	12,7	15	●	
SDMT 1205 ZDTN-R15 JS4045	●						12,7	5,56	12,7	15	●	
							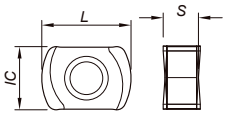					
BLMP 0603 RG31-G (P25~35 - M40)	●	●					6,4	3,73	9	..	●	
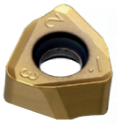							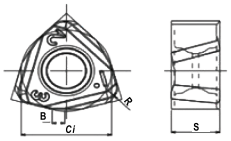					
WNMU 090720-PM VHP125	●						14	-	7,66	2	●	
WNMU 090720-PM VHP705			●				14	-	7,66	2	●	
							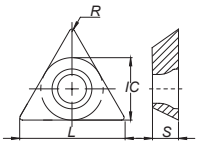					
TCMX 16T308 - MP VHP125	●		●				9,52	3,97	15,3	0,8	●	

● = ARTICOLI IN STOCK - *STOCK ITEMS* / ● = DISPONIBILE SU RICHIESTA - *AVAILABLE UNDER REQUEST*

SISTEMA IDENTIFICATIVO ISO PER INSERTI TORNITURA
Turning Inserts ISO Identification System

H	120°	M	86°
O	135°	V	35°
P	108°	W	80°
S	90°	L	90°
T	60°	A	85°
C	80°	B	82°
D	55°	K	55°
E	75°	R	
F	50°	X	Special Geometries

Symbol for insert shape

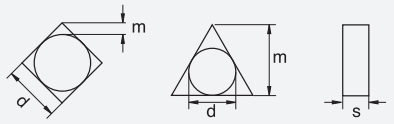

Triangular insert with a facet (secondary cutting edge).

Symbol	m (mm)	d (mm)	s (mm)
A	±0.005	±0.025	±0.025
F	±0.005	±0.013	±0.025
C	±0.013	±0.025	±0.025
H	±0.013	±0.013	±0.025
E	±0.025	±0.025	±0.025
G	±0.025	±0.025	±0.13
J	±0.005	±0.05~±0.13	±0.025
K*	±0.013	±0.05~±0.13	±0.025
L*	±0.025	±0.05~±0.13	±0.025
M*	±0.08~±0.18	±0.05~±0.13	±0.13
N*	±0.08~±0.18	±0.05~±0.13	±0.025
U*	±0.13~±0.38	±0.08~±0.25	±0.13

* As a rule, the sides of these inserts are as sintered. Tolerance differs with insert size, for the accuracy of Class M, refer to the table on the right.

Detailed dimension of M class insert
Tolerances of insert height (mm)

Inscribed circle	T	S	C	D	V
6.35	±0.08	-	-	-	-
9.525	±0.08	±0.08	±0.08	±0.11	±0.13
12.70	±0.13	±0.13	±0.13	±0.15	-
15.875	±0.15	±0.15	±0.15	±0.18	-
19.05	±0.15	±0.15	±0.15	±0.18	-
25.40	-	±0.18	-	-	-
31.75	-	±0.25	-	-	-

Tolerances of inscribed circle (mm)

Inscribed circle	T	S	C	D	V	R
6.35	±0.05	-	-	-	-	-
9.525	±0.05	±0.05	±0.05	±0.05	±0.05	±0.05
12.70	±0.08	±0.08	±0.08	±0.08	-	±0.08
15.875	±0.10	±0.10	±0.10	±0.10	-	±0.10
19.05	-	-	-	-	-	±0.10
25.40	-	±0.13	-	-	-	±0.10
31.75	-	±0.20	-	-	-	±0.12

Symbol for tolerances

A	B	C	D	E
3°	5°	7°	15°	20°
F	G	N	P	O
25°	30°	0	11°	Other clearance angle

Symbol for normal Clearance

ISO **C N M G**

Type of chipbreaker and/or clamping

Metrical

Symbol	Type	Type of hole	Chipbreaker	Shape	Symbol	Type	Type of hole	Chipbreaker	Shape	Symbol	Type	Type of hole	Chipbreaker	Shape
W	With Hole	Round hole / one countersink (40°~60°)	Without chipbreaker		H	With Hole	Round hole / double countersink (70°~90°)	Chipbreaker on one side		G	With Hole	Round hole	Chipbreaker on both sides	
T	With Hole		Chipbreaker on one side		C	With Hole	Round hole / double countersink (70°~90°)	Without chipbreaker		N	With-out Hole	-	Without chipbreaker	
Q	With Hole	Round hole / double countersink (40°~60°)	Without chipbreaker		J	With Hole		Chipbreaker on both sides		R	With-out Hole	-	Chipbreaker on one side	
U	With Hole		Chipbreaker on both sides		A	With Hole	Round hole	Without chipbreaker		F	With-out Hole	-	Chipbreaker on both sides	
B	With Hole	Round hole / double countersink (70°~90°)	Without chipbreaker		M	With Hole	Round hole	Chipbreaker on one side		X	-	-	-	On request

R's	V's (35°)	D's (55°)	C's (80°)	S's (90°)	T's (60°)	W's (80°)	Ø CI mm	Ø CI inch	ANSI Symbol
-	06	04	-	03	06	02	3,97	5/32	1,20
-	08	05	04	04	08	L3	4,76	3/16	1,50
-	09	06	05	05	09	03	5,56	7/32	1,80
06**	-	-	-	-	-	-	6,00	0,236	
06*	11	07	06	06	11	04	6,35	1/4	2,00
07*	13	09	08	07	13	05	7,94	5/16	2,50
08*	-	-	-	-	-	-	8,00	0,315	
09*	16	11	09	09	16	06	9,525	3/8	3,00
10**	-	-	-	-	-	-	10,00	0,394	
12**	-	-	-	-	-	-	12,00	0,472	
12*	22	15	12	12	22	08	12,70	1/2	4,00
15*	27	19	16	15	27	10	15,875	5/8	5,00
16**	-	-	-	-	-	-	16,00	0,63	
19*	33	23	19	19	33	13	19,05	3/4	6,00
20**	-	-	-	-	-	-	20,00	0,787	
25**	-	-	-	-	-	-	25,00	0,984	
25*	44	31	25	25	44	17	25,40	1,00	8,00
31*	54	38	32	31	54	21	31,75	1 1/4	10,00
32**	-	-	-	-	-	-	32,00	1,26	

Symbol for insert size

* ANSI designation only (Radius Designation is 00)
** Metric designation only (Radius Designation is M0)
According to International Standard ISO 1832 - - 2004 "Indexable inserts for cutting tools - Designation"

* Designazione ANSI Raggio = 00
** Designazione Metrica Raggio = MO

12 04 08 — P1

symbol for insert thikness

ISO	mm	ANSI	inch
01	1.59	1	0.062
T1	1.98	1.2	0.078
02	2.38	1.5	0.094
03	3.18	2	0.125
T3	3.97	2.5	0.156
04	4.76	3	0.188
05	5.56	3.5	0.219
06	6.35	4	0.250
07	7.94	5	0.312
09	9.52	6	0.375
12	12.70	8	0.500

Symbol for insert corner configuration

ISO	mm	inch	ANSI
00	Sharp nose		0
02	0.20	.008	0.5
04	0.40	.015	1
08	0.80	.032	2
12	1.2	.047	3
16	1.6	.062	4
20	2.0	.078	5
24	2.4	.094	6
28	2.□78	.109	7
32	3.18	.125	8
	Round insert		0

Chipbreaker geometries

Per la scelta delle geometrie vedere a pag 77
To choose your geometry look on pag 77

Geometria Rompitruciolo inserti Negativi
Negative chip breakers Geometry

P1	P2	P3	
KF	K1	K2	K3
M1	M2	N1	

Geometria Rompitruciolo inserti Positivi
Positive chip breakers Geometry

VP1	VP2	
VM1	VM2	
VK1	VK2	
VM1	VK2	VN

GRADI / *Grades*

	P								M							K						N	S								
	VHP910	VHP325	VHP920	VHP225	VHP705	VHC115	VHC125	VHC135	VHP910	VHP325	VHP920	VHP225	VHC115	VHC125	VHC740	VHP325	VHP705	VHC740	VHC320	VHC705	VHX705	VHX910	VHP910	VHP325	VHP920	VHP705	VHX705	D	S	R
																												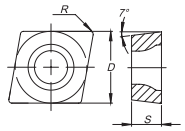		
CCMT 060202-VP1							●																					6,35	2,38	0,2
CCMT 060204-VP2							●																					6,35	2,38	0,4
CCMT 060208-VP2							●																					6,35	2,38	0,8
CCMT 09T304-VP2							●																					9,52	3,97	0,4
CCMT 09T308-VP2							●																					9,52	3,97	0,8
CCMT 120404-VP2							●																					12,7	4,76	0,4
CCMT 120408-VP2							●																					12,7	4,76	0,8
CCMT 120412-VP2							●																					12,7	4,76	1,2
																												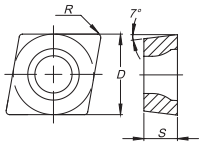		
CCGT 060202-VN																						●						6,35	2,38	0,2
CCGT 060204-VN																						●						6,35	2,38	0,4
CCGT 09T302-VN																						●						9,52	3,97	0,2
CCGT 09T304-VN																						●						9,52	3,97	0,4
CCGT 09T308-VN																						●						9,52	3,97	0,8
CCGT 120402-VN																						●						12,7	4,76	0,2
CCGT 120404-VN																						●						12,7	4,76	0,4
CCGT 120408-VN																						●						12,7	4,76	08
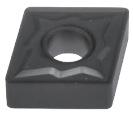																												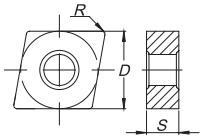		
CNMG 120404-P1							●																					12,7	4,76	0,4
CNMG 120408-P3							●							●					●									12,7	4,76	0,8
CNMG 120412-P3							●							●					●									12,7	4,76	1,2
CNMG 120416-P3							●							●					●									12,7	4,76	1,6

● = ARTICOLI IN STOCK - *STOCK ITEMS*
● = DISPONIBILE SU RICHIESTA - *AVAILABLE UNDER REQUEST*

GRADI / *Grades*

	P								M							K						N	S							
	VHP910	VHP325	VHP920	VHP225	VHP705	VHC115	VHC125	VHC135	VHP910	VHP325	VHP920	VHP225	VHC115	VHC125	VHC740	VHP325	VHP705	VHC740	VHC320	VHC705	VHX705	VHX910	VHP910	VHP325	VHP920	VHP705	VHX705	D	S	R
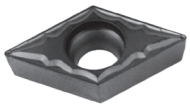																												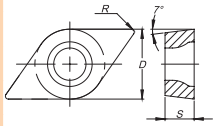		
DCMT 070202-VP2							●																					6,35	2,38	0,2
DCMT 11T304-VP2							●																					9,52	3,97	0,4
DCMT 11T308-VP2							●																					9,52	3,97	0,8
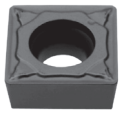																												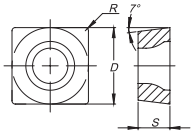		
SCMT 09T304-VP2							●																					9,52	3,97	0,4
SCMT 09T308-VP2							●																					9,52	3,97	0,8
SCMT 120404-VP2							●																					12,7	4,76	0,4
SCMT 120408-VP2							●																					12,7	4,76	0,8
																												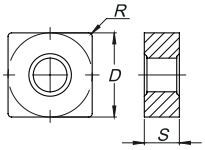		
SNMG 120408-P3							●							●														12,7	4,76	0,8
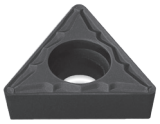																												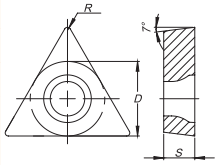		
TCMT 110204-VP2							●																					6,35	2,38	0,4
TCMT 110208-VP2							●																					6,35	2,38	0,8
TCMT 16T304-VP2							●																					9,52	3,97	0,4
TCMT 16T308-VP2							●																					9,52	3,97	0,8
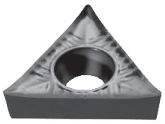																												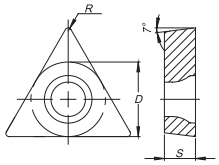		
TCGT 090204-VN																						●						5,56	2,38	0,4
TCGT 110202-VN																						●						6,35	2,38	0,2
TCGT 110204-VN																						●						6,35	2,38	0,4
TCGT 16T302-VN																						●						9,52	3,97	0,2
TCGT 16T304-VN																						●						9,52	3,97	0,4
TCGT 16T308-VN																						●						9,52	3,97	0,8

● = ARTICOLI IN STOCK - *STOCK ITEMS*

● = DISPONIBILE SU RICHIESTA - *AVAILABLE UNDER REQUEST*

GRADI / *Grades*

	P								M							K							N	S							
	VHP910	VHP325	VHP920	VHP225	VHP705	VHC115	VHC125	VHC135	VHP910	VHP325	VHP930	VHP225	VHC115	VHC125	VHC740	VHP920	VHP705	VHC740	VHC320	VHC705	VHX705	VHX910	VHP910	VHP325	VHP920	VHP705	VHX705	D	S	R
																												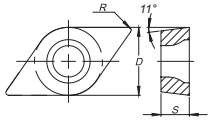			
VBMT 160404-FP							●							●														9,52	4,76	0,4
VBMT 160408-FP							●							●														9,52	4,76	0,8
																												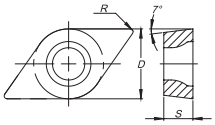			
VCMT 110302-P3							●							●														6,35	3,18	0,2
VCMT 160404-FP							●							●														9,52	4,76	0,4
VCMT 160408-FP							●							●														9,52	4,76	0,8
																												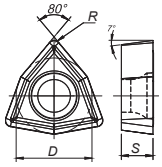			
WCMT 020102			●								●					●												3,97	1,59	0,2
WCMT 020104			●								●					●												3,97	1,59	0,4
WCGT 020102-L																						●						3,97	1,59	0,2
WCGT 020104-L																						●						3,97	1,59	0,4
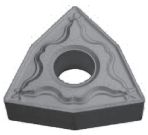																												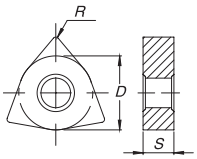			
WNMG 060404-P1						●				●																		9,52	4,76	0,4
WNMG 060408-P1						●				●																		9,52	4,76	0,8
WNMG 080408-P1						●				●																		12,7	4,76	0,8
WNMG 080412-P1						●				●																		12,7	4,76	1,2
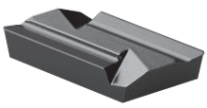																												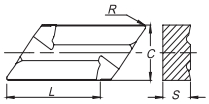			
																												C	L	S	R
KNUX 160405-L01							●							●					●									9,52	16,5	4,76	0,5
KNUX 160405-R01							●							●					●									9,52	16,5	4,76	0,5
KNUX 160410-L02						●							●															9,52	16,5	4,76	1
KNUX 160410-R02						●							●															9,52	16,5	4,76	1

KNUX.. - 01 = Operazioni di Finitura / *Finishing*
KNUX.. - 02 = Medie operazioni, Sgrossatura / *Medium*

Inserti WCMT - WCGT intercambiabili con / Exchangeable with: SUMITOMO-ISCAR- SECO

● = ARTICOLI IN STOCK - *STOCK ITEMS*
● = DISPONIBILE SU RICHIESTA - *AVAILABLE UNDER REQUEST*

● = ARTICOLI IN STOCK - *STOCK ITEMS* / ● = DISPONIBILE SU RICHIESTA - *AVAILABLE UNDER REQUEST*

GRADI / *Grades*

	P							M			K									N		S		H						
ISO CODICE / *Code*	VHP103	VHP910	VHP920	VHP930	VHP740	VHP125	VHP135	VHP920	VHP930	VHP740	VHP910	VHP920	VHP930	VHP740	VHP705	VHP325	VHC705	VHC740	VHX910	VHPCD	VHX910	VHP920	VHP740	VHP103	VHCBN	*IC*	*S*	*L*	*R*	*F*
																										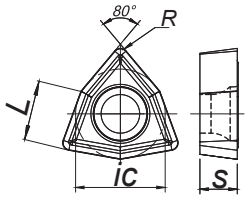				
WCMX 030208			●					●				●										●				5,56	2,38	3,8	0,8	-
WCMX 040208			●					●				●										●				6,35	2,38	4,3	0,8	-
WCMX 050308			●					●				●										●				7,94	3,18	5,4	0,8	-
WCMX 06T308			●					●				●										●				9,52	3,97	6,5	0,8	-
WCMX 080412			●					●				●										●				12,7	4,76	8,7	1,2	-
																										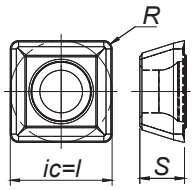				
SPMG 050204			●					●				●										●				5	2,38	5	0,4	-
SPMG 060204			●					●				●										●				6	2,38	6	0,4	-
SPMG 07T308			●					●				●										●				7,94	3,97	7,94	0,8	-
SPMG 090408			●					●				●										●				9,80	4,3	9,80	0,8	-
SPMG 110408			●					●				●										●				11,5	4,8	11,5	0,8	-
																										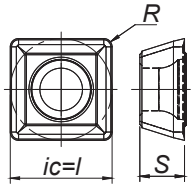				
SOMT 050204			●					●				●										●				4,9	2,38	4,9	0,4	-
SOMT 060204			●					●				●										●				5,7	2,38	5,7	0,4	-
SOMT 070306			●					●				●										●				6,8	2,8	6,8	0,6	-
SOMT 08T306			●					●				●										●				7,9	3,97	7,9	0,6	-
SOMT 09T308			●					●				●										●				9,2	3,97	9,2	0,8	-
SOMT 11T308			●					●				●										●				11	3,97	11	0,8	-

● = ARTICOLI IN STOCK - *STOCK ITEMS*
● = DISPONIBILE SU RICHIESTA - *AVAILABLE UNDER REQUEST*

INSERTO - *Insert Type*: VTMX - ..N

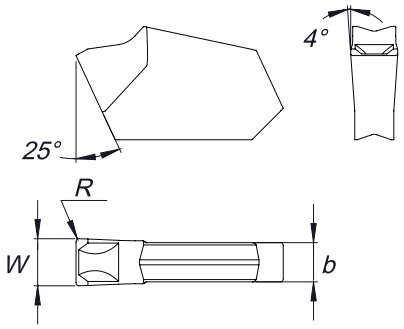

Riferimento Articolo *Code*	GRADI / *Grades* P VHC115	P VHC135	M VHC115	M VHC135	K VHC320	K VHC135	Dimensioni *Dimension* (mm) *w*	*b*	*R*	Parametri di Taglio *Cutting Condition* Fn (mm/rev)	Min	Max
VTMX - 2N	●	●	●	●	●	●	2,2	1,8	0,16	0,08	0,05	0,16
VTMX - 3N	●	●	●	●	●	●	3,1	2,8	0,20	0,15	0,10	0,25
VTMX - 4N	●	●	●	●	●	●	4,1	3,5	0,25	0,18	0,10	0,30
VTMX - 5N	●	●	●	●	●	●	5,1	4,5	0,28	0,20	0,12	0,35
VTMX - 6N	●	●	●	●	●	●	6,4	5,5	0,35	0,25	0,15	0,40

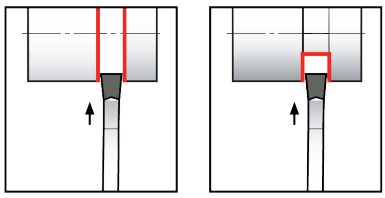

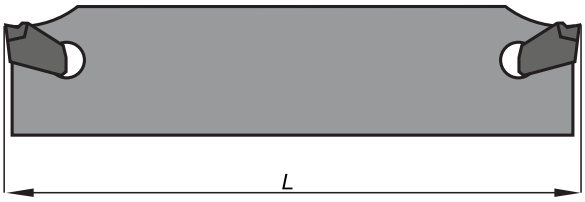

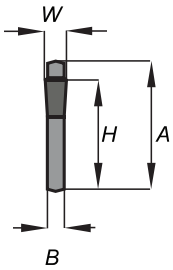

Riferimento Articolo *Code*	Dimensioni / *Dimension* A	W	H	B	L	Inserto *Insert*	Key	Stock
VTGLX 2 - 19	19	2	16	1,6	85	VTMX-2N	5 m/m	●
VTGLX 2 - 26	26	2	21,4	1,6	110	VTMX-2N	5 m/m	●
VTGLX 3 - 26	26	3	21,4	2,4	110	VTMX-3N	5 m/m	●
VTGLX 4 - 26	26	4	21,4	3,2	110	VTMX-4N	5 m/m	●
VTGLX 5 - 26	26	5	21,4	4	110	VTMX-5N	5 m/m	●
VTGLX 6 - 26	26	6	21,4	5,2	110	VTMX-6N	5 m/m	●
VTGLX 2 - 32	32	2	26	1,6	150	VTMX-2N	5 m/m	●
VTGLX 3 - 32	32	3	26	2,4	150	VTMX-3N	5 m/m	●
VTGLX 4 - 32	32	4	26	3,2	150	VTMX-4N	5 m/m	●
VTGLX 5 - 32	32	5	26	4	150	VTMX-5N	5 m/m	●
VTGLX 6 - 32	32	6	26	5,2	150	VTMX-6N	5 m/m	●

● = ARTICOLI IN STOCK - *STOCK ITEMS*
● = DISPONIBILE SU RICHIESTA - *AVAILABLE UNDER REQUEST*

GUIDA ALLA SCELTA DELLE LEGHE
Guide Selections Alloys

- Steel, Malleable Iron / *Acciai Malleabili*
- Stainless Steel / *Acciai Inossidabili*
- Cast Iron / *Ghise*
- Non-Ferrous Alloys / *Acciai non Ferrosi*
- High Temp. Resistant / *Acciai Refrattari*
- Hardened Steel, Iron / *Acciai Temprati*

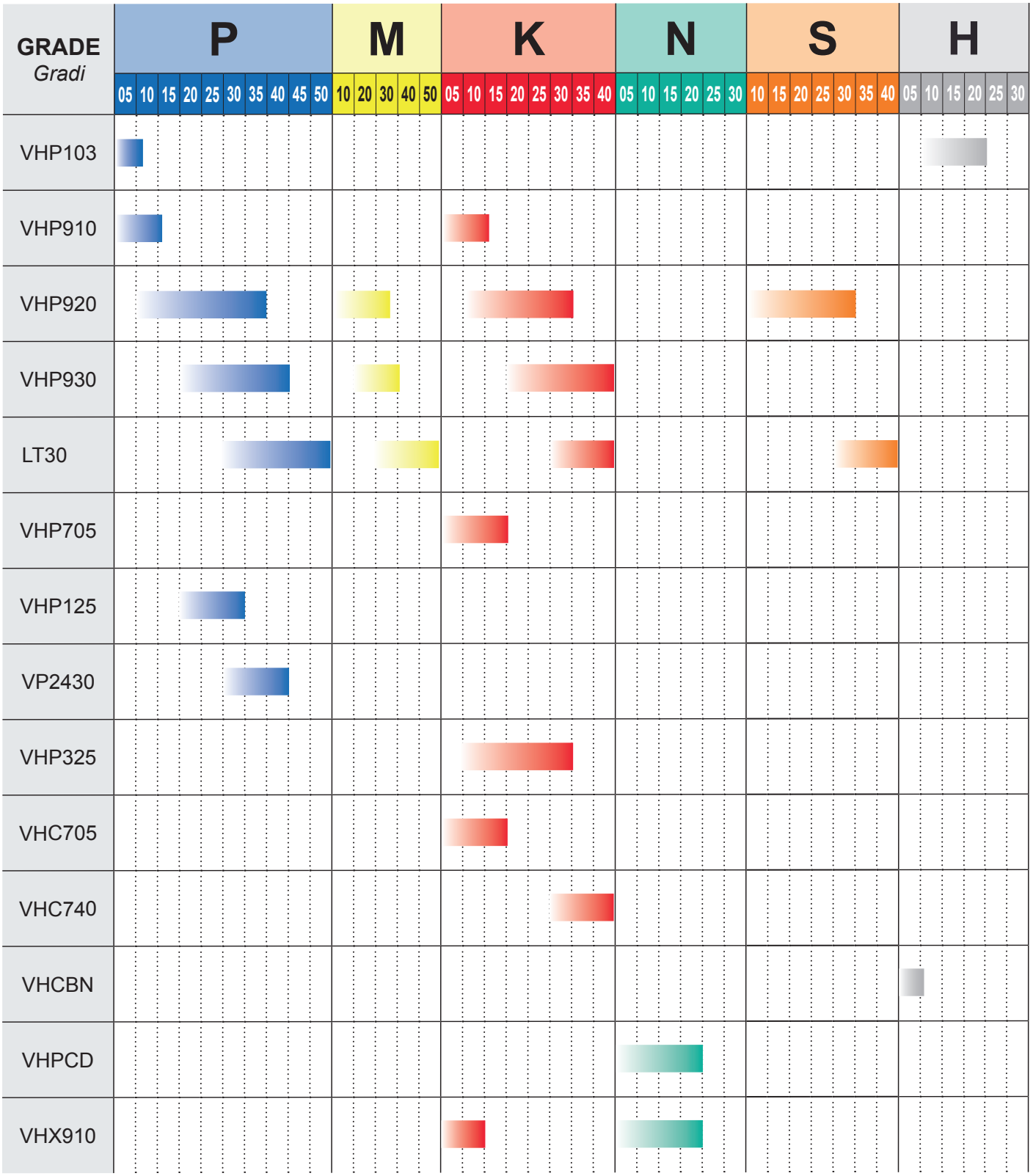

Guida per la selezione inserti Negativi
Selection guide for Negative Inserts

ISO	HB (Brinell)	MEDIE APPLICAZIONI *Medium*		SGROSSATURA MEDIA *Medium to Roughing*		SGROSSATURA PESANTE *Heavy Roughing*	
		Geometria	Gradi	Geometria	Gradi	Geometria	Gradi
P	125-220	P1	VHC115	P2	VHC115	P3	VHC125
	220-280		VHC115		VHC115		VHC740
	280-380		VHC125		VHC740		VHC740
M	200-330		VHP325		VHC125		VHC125
	200-330		VHP325		VHC125		VHC740
	230-260		VHC125		VHC740		VHC740
K	130-230	KF *(Flat)*	VHC705	KF *(Flat)*	VHC705	K3	VHC705
	180-245	K1	VHC320	K2	VHC320		VHC320
	160-250		VHC320		VHC320		VHC320
S	200-320	M1	VHP920	M1	VHP920	M2	VHP325
N	30-130	N1	VHX910	N1	VHX910	-	-

Guida per la selezione inserti Positivi
Selection guide for Positive Inserts

ISO	HB (Brinell)	FINITURA MEDIA *Medium to Finishing*		SGROSSATURA MEDIA *Medium to Roughing*	
		Geometria	Gradi	Geometria	Gradi
P	125-220	VP1	VHC115	VP2	VHC115
	220-280		VHC115		VHC125
	280-380		VHC125		VHC125
M	200-330	VM1	VHP325	VM2	VHP325
	200-330		VHP325		VHC115
	230-260		VHC125		VHC115
K	130-230	VK1	VHC705	VK2	VHC705
	180-245		VHC705		VHC320
	160-250		VHC320		VHC320
S	Leghe Titanio *Titanium Alloys*	VM1	VHP910	VM2	VHP325
	Super Leghe *Super Alloys*	VK2	VHX705	VK2	VHX705
N	30-130	VN	VHX910	VN	VHX910

Note

Tecnologie per Fresare

Milling Technologies

VANUT® srl

STABILIMENTO E UFFICI - *Factory & Offices*

via Circonvallazione,11 - 10026 Santena (TO) Italy

Tel.: +39 011 9456285

mail: *vendite.vanut@gmail.com*

website: *www.vanut.net*

ACCREDIA L'ENTE DI ACCREDITAMENTO

kiwa certified CERMET SISTEMA DI GESTIONE CERTIFICATO

REG.No 1248-A
UNI EN ISO 9001 : 2015
SCADENZA 02-09-2027

TIMBRO RIVENDITORE - Stamp dealer